Walraven VibraTek® SB-FF Silentblock

(L20566)

a rubber silentblock with two internal threads

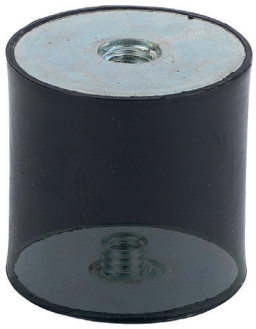

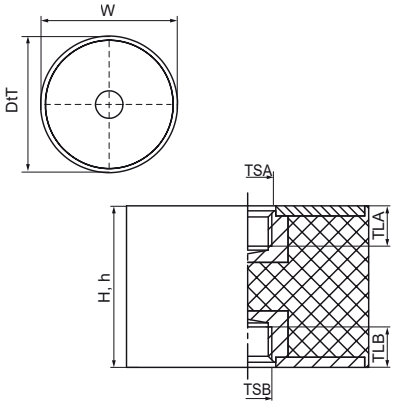

Features & benefits

- a universal rubber absorber, ideal for use with all kinds of elastic suspension or mounting of equipment
- ideal for use with machinery and equipment mounted on metallic surface
- with two female threads
- for use in compression only
- working temperature range -30 °C till 80 °C

Product Number	Thread Size A	Thread Size B	Thread Length A	Thread Length B	Total Height	Total Width	Total Depth	Height	Maximum Allowed Load Faz
Reference Letter	*TSA*	*TSB*	*TLA*	*TLB*	*H*	*W*	*DtT*	*h*	*Fa,z*
Unit description			*mm*	*mm*	*mm*	*mm*	*mm*	*mm*	*N*
2801600420	M8	M8	8	8	25	30	30	25	420
2801600750	M8	M8	8	8	40	40	40	40	750
2801601170	M10	M10	8	8	40	50	50	40	1,170
2801601690	M12	M12	10	10	40	60	60	40	1,690
2801600181	M8	M8	8	8	20	20	20	20	180
2801600291	M8	M8	8	8	20	25	25	20	290