Technical data sheet

Tensioning wire clip A4

Item number: 1404168



Tensioning wire clip for cable 4–9 mm 11–16 mm. With V4A bolt M4x14.

CE

A4	Stainless steel
2B	Bright, treated

Master data

Item number	1404168
Type	1020 11-16 A4
Description 1	Tensioning wire clip
Description 2	for cable 4-9 mm
Manufacturer	OBO
Dimension	11-16mm
Material	Stainless steel 1.4571
Surface Surface standard	Bright, treated
Smallest sales unit	50
Unit of quantity	Piece
Weight	1.42 kg
Weight unit	kg/100 pc.
CO2 Footprint (GWP) Cradle-to-Gate	0,0846 kg CO2e / 1 Piece

Technical data sheet

Tensioning wire clip A4

Item number: 1404168

Dimensions

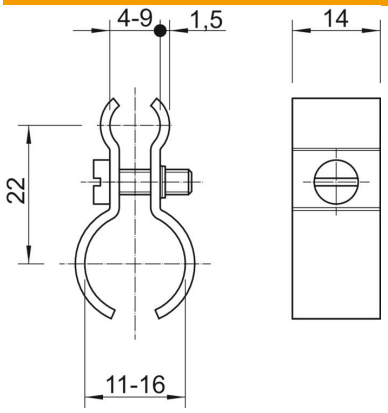

Dimension A	22 mm

Technical data

Version for	Not insulated
ROHS-conformant	yes
Bolt	M4x14