Technical data sheet

Wire cable clamp G

Item number: 5305012

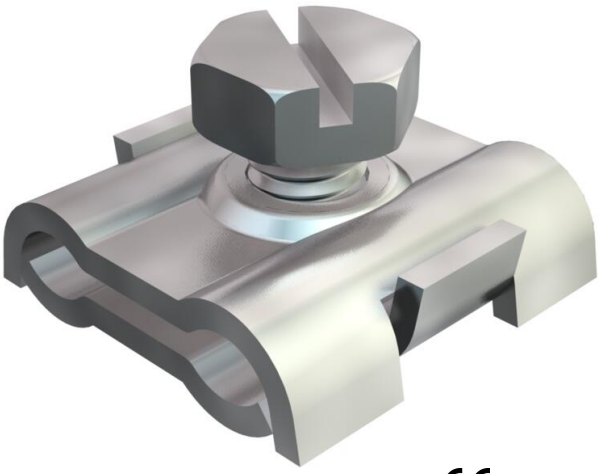

Wire cable clamp for fastening steel wire tensioning ropes.

CE

St	Steel
G	Electrogalvanised

Master data

Item number	5305012
Type	261 3-6 G
Description 1	Wire cable clamp
Manufacturer	OBO
Dimension	3-6mm
Material	Steel
Surface	Electrogalvanised
Surface standard	EN ISO 19598 / EN ISO 4042
Smallest sales unit	100
Unit of quantity	Piece
Weight	1.498 kg
Weight unit	kg/100 pc.
CO2 Footprint (GWP) Cradle-to-Gate	0,0439 kg CO2e / 1 Piece

Technical data sheet

Wire cable clamp G

Item number: 5305012

Dimensions

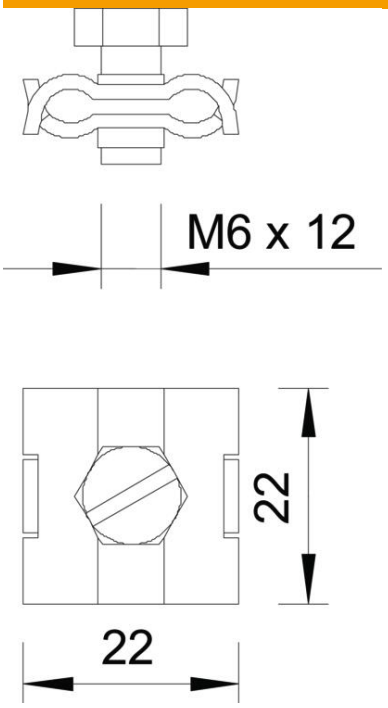

Technical data

Version for	Not insulated
for cable diameter, max.	6 mm
for cable diameter, min.	3 mm
ROHS-conformant	yes
Bolt	M6x12