Technical data sheet

Tensioning wire clip G

Item number: 1404180



To fasten cables to tensioning cables. With bolt M4x13.

CE

St	Steel
G	Electrogalvanised

Master data

Item number	1404180
Type	1020 14-18 G
Description 1	Tensioning wire clip
Description 2	for cable 4-9 mm
Manufacturer	OBO
Dimension	14-18mm
Material	Steel
Surface	Electrogalvanised
Surface standard	EN ISO 19598 / EN ISO 4042
Smallest sales unit	50
Unit of quantity	Piece
Weight	1.65 kg
Weight unit	kg/100 pc.
CO2 Footprint (GWP) Cradle-to-Gate	0,0408 kg CO2e / 1 Piece

Technical data sheet

Tensioning wire clip G

Item number: 1404180

Dimensions

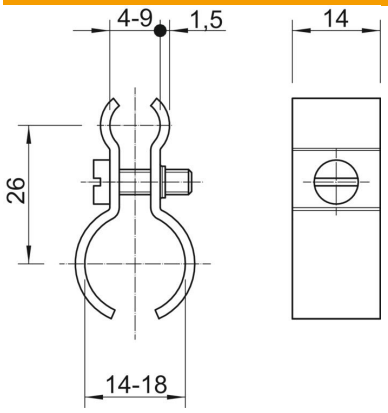

Dimension A	26 mm

Technical data

Number of cables/pipes	1
Version for	Not insulated
ROHS-conformant	yes
Bolt	M4x14