Technical data sheet

Wire cable clamp A4

Item number: 5305016

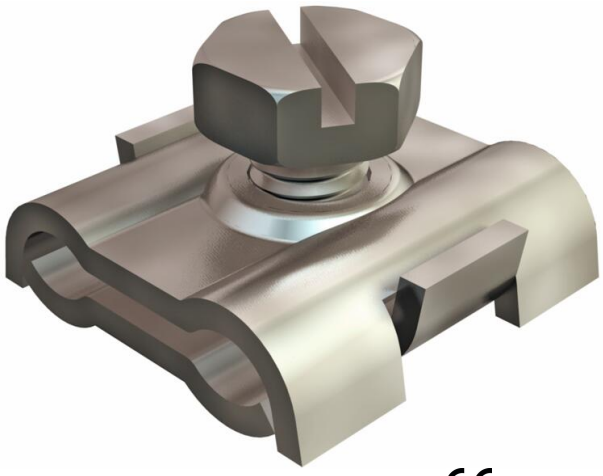

The cable and pipe fastenings of the special system include cable ties, fastening straps and installation strips, with which cable and pipe installations can be fastened to cable support systems such as cable or mesh cable trays or other mounting constructions. A complete tensioning wire system to suspend and catch cable weights is also a component part of the special system.

CE

A4	Stainless steel
2B	Bright, treated

Master data

Item number	5305016
Type	261 3-6 A4
Description 1	Wire cable clamp
Manufacturer	OBO
Dimension	3-6mm
Material	Stainless steel 1.4571
Surface Surface standard	Bright, treated
Smallest sales unit	100
Unit of quantity	Piece
Weight	1.498 kg
Weight unit	kg/100 pc.
CO2 Footprint (GWP) Cradle-to-Gate	0,112 kg CO2e / 1 Piece

Technical data sheet

Wire cable clamp A4

Item number: 5305016

Dimensions

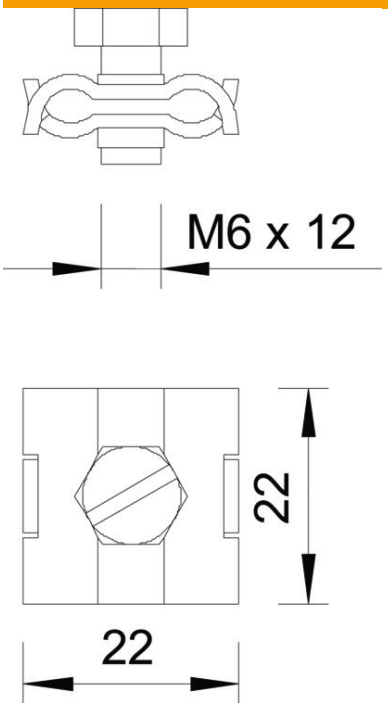

Technical data

Version for	Not insulated
for cable diameter, max.	6 mm
for cable diameter, min.	3 mm
ROHS-conformant	yes
Bolt	M6x12