Data Sheet | Item Number: 262-153

2-conductor terminal strip; without push-buttons; with snap-in mounting feet; 3-pole; for plate thickness 0.6 - 1.2 mm; Fixing hole 3.5 mm Ø; 4 mm²; CAGE CLAMP®; 4,00 mm²; gray

https://www.wago.com/262-153

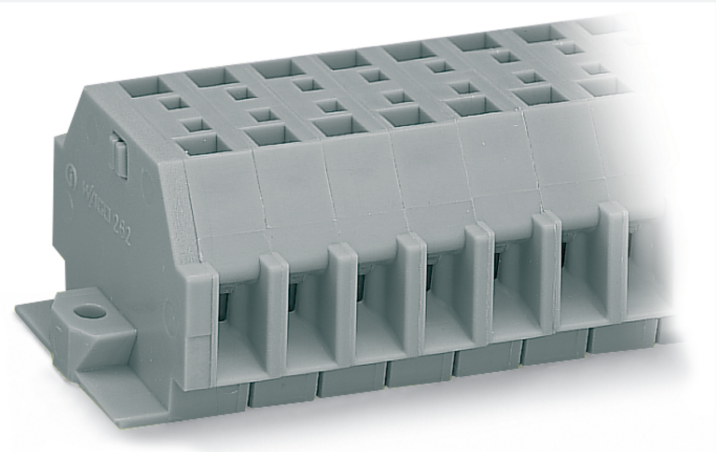

Color: gray

Similar to illustration

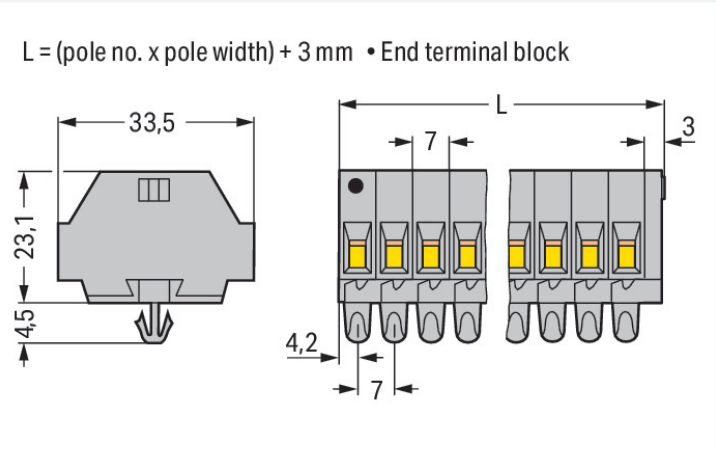

Dimensions in mm

Through terminal block, 262 Series, CAGE CLAMP®

This through terminal block (item number 262-153) is designed to connect conductors quickly and easily. Conductors can only be connected to this through terminal block if their strip length is between 9 and 10 mm . Our mini rail-mount terminal blocks are perfect for working in tight spaces thanks to their compact design. With various mounting and actuation options, they offer maximum flexibility. Featuring conductor terminals along with CAGE CLAMP®, this product outperforms the competition. Our CAGE CLAMP® connection provides a reliable and maintenance-free way to connect all types of conductors. You do not need to prepare the conductor in any way, such as crimping ferrules. The dimensions are (24 x 33.5 x 27.5) mm (width x height x depth). Depending on the conductor type, this through terminal block is ideal for conductor cross sections ranging from 0.08 mm² to 4 mm².

This mini rail-mount terminal block is operated with an operating tool.

Electrical data

Ratings per IEC/EN	
Nominal voltage (III/3)	690 V
Rated impulse withstand voltage (III / 3)	8 kV
Rated current	32 A
Legend (ratings)	(III / 3) ≙ Overvoltage category III / Pollution degree 3

Approvals per	UL 1059		
Use group	B	C	D
Rated voltage	300 V	300 V	300 V
Rated current	20 A	20 A	10 A

Approvals per	CSA 22.2 No 158		
Use group	B	C	D
Rated voltage	600 V	300 V	600 V
Rated current	5 A	25 A	5 A

General information	
Wiring direction	Side-entry wiring

Continued on next page

Connection Data

Clamping units	6
Total number of potentials	3
Number of levels	1

Connection 1

Connection technology	CAGE CLAMP®
Actuation type	Operating tool
Connectable conductor materials	Copper
Solid conductor	0.08 … 4 mm² / 28 … 12 AWG
Fine-stranded conductor	0.08 … 4 mm² / 28 … 12 AWG
Strip length	9 … 10 mm / 0.35 … 0.39 inches
Pole number	3

Physical data

Width	24 mm / 0.945 inches
Height	33.5 mm / 1.319 inches
Height from the surface	23.1 mm / 0.909 inches
Depth	27.5 mm / 1.083 inches
Module width	7 mm / 0.276 inches

Mechanical data

Design	horizontal type
Mounting type	Snap-in foot
Marking level	Side marking

Material data

Note (material data)	Information on material specifications can be found here
Color	gray
Material group	I
Insulation material (main housing)	Polyamide (PA66)
Flammability class per UL94	V0
Fire load	0.273 MJ
Halogen-free	Yes
Weight	13.5 g

Commercial data

PU (SPU)	100 pcs
Packaging type	Box
Country of origin	DE
GTIN	4044918642323
Customs tariff number	85369010000

Product Classification

UNSPSC	39121410
eCl@ss 10.0	27-14-11-06
eCl@ss 9.0	27-14-11-06
ETIM 9.0	EC001284
ETIM 10.0	EC001284
ECCN	NO US CLASSIFICATION

 Continued on next page

Environmental Product Compliance

RoHS Compliance Status	Compliant,No Exemption

Approvals / Certificates

General approvals

Approval	Standard	Certificate Name
CCA DEKRA Certification B.V.	EN 60998	NTR NL 7661
CSA DEKRA Certification B.V.	C22.2	70010891
KEMA/KEUR DEKRA Certification B.V.	EN 60998	71-102644
UR Underwriters Laboratories Inc.	UL 1059	E45172

Declarations of conformity and manufacturer's declarations

Approval	Standard	Certificate Name
EU-Declaration of Conformity WAGO GmbH & Co. KG	-	-
UK-Declaration of Conformity WAGO GmbH & Co. KG	-	-

Approvals for marine applications

Approval	Standard	Certificate Name
ABS American Bureau of Shipping	-	24-0095979-PDA
BV Bureau Veritas S.A.	EN 60947	07436/G0 BV
DNV GL Det Norske Veritas, Germanischer Lloyd	-	TAE00001V2
LR Lloyds Register	IEC 60998	LR22173030TA
PRS Polski Rejestr Statków	-	TE/1094/880590/23

Downloads

Environmental Product Compliance

Compliance Search

Environmental Product Compliance 262-153

Continued on next page

Documentation

Bid Text			
262-153	17.08.2017	doc 25.50 KB	
262-153	19.02.2019	xml 3.08 KB	

CAD/CAE-Data

CAD data
2D/3D Models 262-153

CAE data
EPLAN Data Portal 262-153
WSCAD Universe 262-153
ZUKEN Portal 262-153

1 Compatible Products

1.1 Optional Accessories

1.1.1 DIN-rail

1.1.1.1 Mounting accessories

Item No.: 210-154
Aluminum carrier rail; 1000 mm long; 18 mm wide; 7 mm high; silver-colored

1.1.2 Ferrule

1.1.2.1 Ferrule

Item No.: 216-241
Ferrule; Sleeve for 0.5 mm² / 20 AWG; insulated; electro-tin plated; electrolytic copper; gastight crimped; acc. to DIN 46228, Part 4/09.90; white

Item No.: 216-141
Ferrule; Sleeve for 0.5 mm² / 20 AWG; uninsulated; electro-tin plated; electrolytic copper; gastight crimped; acc. to DIN 46228, Part 1/08.92

Item No.: 216-242
Ferrule; Sleeve for 0.75 mm² / 18 AWG; insulated; electro-tin plated; electrolytic copper; gastight crimped; acc. to DIN 46228, Part 4/09.90; gray

Item No.: 216-262
Ferrule; Sleeve for 0.75 mm² / 18 AWG; insulated; electro-tin plated; electrolytic copper; gastight crimped; acc. to DIN 46228, Part 4/09.90; gray

Item No.: 216-142
Ferrule; Sleeve for 0.75 mm² / 18 AWG; uninsulated; electro-tin plated; electrolytic copper; gastight crimped; acc. to DIN 46228, Part 1/08.92

Item No.: 216-243
Ferrule; Sleeve for 1 mm² / AWG 18; insulated; electro-tin plated; electrolytic copper; gastight crimped; acc. to DIN 46228, Part 4/09.90; red

Item No.: 216-263
Ferrule; Sleeve for 1 mm² / AWG 18; insulated; electro-tin plated; electrolytic copper; gastight crimped; acc. to DIN 46228, Part 4/09.90; red

Item No.: 216-143
Ferrule; Sleeve for 1 mm² / AWG 18; uninsulated; electro-tin plated; electrolytic copper; gastight crimped; acc. to DIN 46228, Part 1/08.92

Item No.: 216-244
Ferrule; Sleeve for 1.5 mm² / AWG 16; insulated; electro-tin plated; electrolytic copper; gastight crimped; acc. to DIN 46228, Part 4/09.90; black

Item No.: 216-264
Ferrule; Sleeve for 1.5 mm² / AWG 16; insulated; electro-tin plated; electrolytic copper; gastight crimped; acc. to DIN 46228, Part 4/09.90; black

Item No.: 216-284
Ferrule; Sleeve for 1.5 mm² / AWG 16; insulated; electro-tin plated; electrolytic copper; gastight crimped; acc. to DIN 46228, Part 4/09.90; black

Item No.: 216-144
Ferrule; Sleeve for 1.5 mm² / AWG 16; uninsulated; electro-tin plated; electrolytic copper; gastight crimped; acc. to DIN 46228, Part 1/08.92; silver-colored

 Continued on next page

1.1.2.1 Ferrule

Item No.: 216-289
Ferrule; Sleeve for 10 mm² / AWG 8; insulated; electro-tin plated; electrolytic copper; gastight crimped; acc. to DIN 46228, Part 4/09.90; red

Item No.: 216-209
Ferrule; Sleeve for 10 mm² / AWG 8; insulated; electro-tin plated; red

Item No.: 216-109
Ferrule; Sleeve for 10 mm² / AWG 8; uninsulated; electro-tin plated

Item No.: 216-210
Ferrule; Sleeve for 16 mm² / AWG 6; insulated; electro-tin plated; electrolytic copper; gastight crimped; acc. to DIN 46228, Part 4/09.90; blue

Item No.: 216-110
Ferrule; Sleeve for 16 mm² / AWG 6; uninsulated; electro-tin plated; brown metallic

Item No.: 216-246
Ferrule; Sleeve for 2.5 mm² / AWG 14; insulated; electro-tin plated; electrolytic copper; gastight crimped; acc. to DIN 46228, Part 4/09.90; blue

Item No.: 216-266
Ferrule; Sleeve for 2.5 mm² / AWG 14; insulated; electro-tin plated; electrolytic copper; gastight crimped; acc. to DIN 46228, Part 4/09.90; blue

Item No.: 216-286
Ferrule; Sleeve for 2.5 mm² / AWG 14; insulated; electro-tin plated; electrolytic copper; gastight crimped; acc. to DIN 46228, Part 4/09.90; blue

Item No.: 216-267
Ferrule; Sleeve for 4 mm² / AWG 12; insulated; electro-tin plated; electrolytic copper; gastight crimped; acc. to DIN 46228, Part 4/09.90; gray

Item No.: 216-287
Ferrule; Sleeve for 4 mm² / AWG 12; insulated; electro-tin plated; electrolytic copper; gastight crimped; acc. to DIN 46228, Part 4/09.90; gray

Item No.: 216-208
Ferrule; Sleeve for 6 mm² / AWG 10; insulated; electro-tin plated; electrolytic copper; gastight crimped; acc. to DIN 46228, Part 4/09.90; yellow

Item No.: 216-288
Ferrule; Sleeve for 6 mm² / AWG 10; insulated; electro-tin plated; electrolytic copper; gastight crimped; acc. to DIN 46228, Part 4/09.90; yellow

Item No.: 216-108
Ferrule; Sleeve for 6 mm² / AWG 10; uninsulated; electro-tin plated; silver-colored

1.1.3 Installation

1.1.3.1 Mounting accessories

Item No.: 209-137
Mounting adapter; can be used as end stop; 6.5 mm wide; gray

Item No.: 209-120
Mounting foot; can be snapped on terminal blocks with snap-in mounting foot; for mounting on relay-modules; 6.4 mm wide; gray

1.1.4 Jumper

1.1.4.1 Jumper

Item No.: 262-402
Jumper; for conductor entry; 2-way; insulated; gray

1.1.5 Marking

1.1.5.1 Marking strip

Item No.: 210-833
Marking strips; 25 m on roll; 6 mm wide; plain; Self-adhesive; white

 Continued on next page

1.1.6 Test and measurement

1.1.6.1 Testing accessories

Item No.: 249-137
Test plug module; without locking device; modular; for 2-conductor terminal blocks; gray

1.1.7 Tool

1.1.7.1 Operating tool

Item No.: 210-658
Operating tool; Blade: 3.5 x 0.5 mm; with a partially insulated shaft; angled; short; multicoloured

Item No.: 210-720
Operating tool; Blade: 3.5 x 0.5 mm; with a partially insulated shaft; multicoloured

Item No.: 210-657
Operating tool; Blade: 3.5 x 0.5 mm; with a partially insulated shaft; short; multicoloured

Installation Notes

Conductor termination

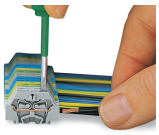

CAGE CLAMP® connection
Inserting a conductor.
With ferruled conductors, it is necessary to use a terminal block one size larger than the conductor's nominal cross-section.

Commoning

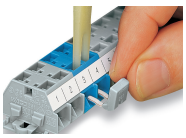

Commoning with comb-style jumper bar.

Installation

Mounting a terminal strip with snap-in feet into holes.

Mounting a terminal strip with snap-in feet onto aluminum rail.

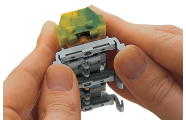

Terminal strip with snap-in mounting feet Snapping a mounting foot (209-120). (Distance between mounting feet: approx. 25 … 30 mm)

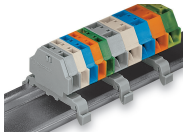

Terminal strip; with snap-in mounting feet; for DIN-35 rail

 Continued on next page

Terminal strip with snap-in mounting feet, for 0.6 … 1.2 mm plate thickness, 3.5 mm mounting hole diameter (also for 210-154 Aluminum Rail or with 209-120 Mounting Foot for DIN-35 rail)

Marking

Marking with self-adhesive marking strips.

Marking by direct printing (upon request).