Data Sheet | Item Number: 891-8995/206-501

pre-assembled connecting cable; Eca; Plug/open-ended; 5-pole; Cod. A; H05VV-F 5G 1.5 mm²; 5 m; 1,50 mm²; black

https://www.wago.com/891-8995/206-501

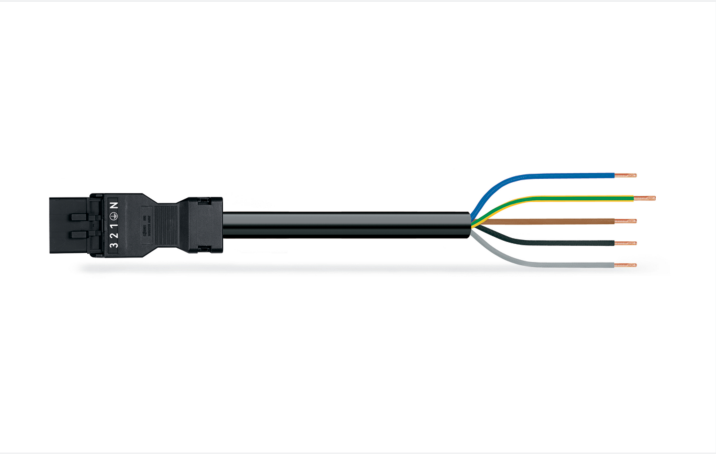

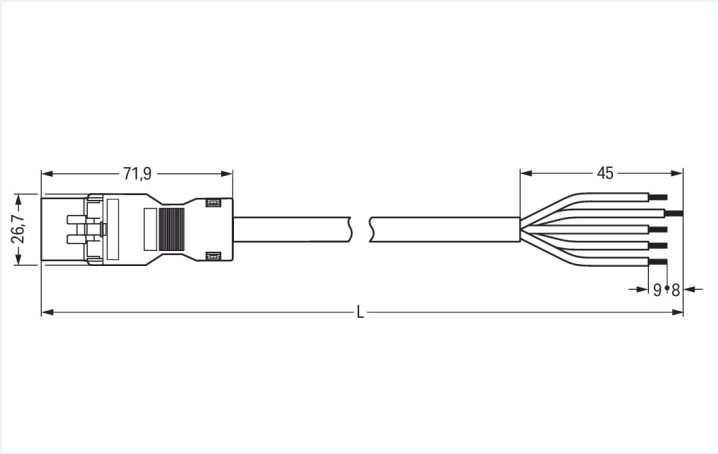

Color: ■ black

Dimensions in mm

Cable assembly *WINSTA*® MINI with strain relief

The *WINSTA*® MINI cable assembly with protection against mismating is the pluggable solution for your application in control cabinets, on PCBs or for lighting connections. Whether on PCBs, in control cabinets or for connecting lights – pluggable installation connectors from WAGO allow you to make connections according to a huge variety of requirements in no time flat. The coding options reduce installation errors, allowing fast, maintenance-free wiring of all components. Thanks to the color coding and mechanical A coding of *WINSTA*® MINI pluggable installation connectors, you can clearly distinguish different circuits. *WINSTA*® MINI satisfies the demand for miniaturisation. Our smallest pluggable connection system is primarily suited for lights, for instance, since due to LED technology, these offer significantly less space for the connection technology. Of course, the safety of buildings must always be ensured, even after the electrical installation has been performed. The mandatory safety requirements in connection with EU CPR are fully satisfied by this product through fire class E.

Fast, secure pluggable connections – cable assemblies from WAGO

The cable is pre-assembled with a plug and a free end. The WINSTA® Pluggable Connection System is ideally tailored to the very strict requirements of building installation. It makes electrical installation pluggable, and thus faster, more reliable, and error-free. Using this pre-assembled system reduces time spent on assembly and installation errors at the construction site. Now you can also lower installation costs without compromising quality and safety: with marking eliminates the need for servicing and prevents unnecessary downtime.

- pluggable installation connectors with protection against mismating
- compact design for conductors with a cross-section up to 1.5 mm²
- for any mains application
- ready for immediate use
- quick replacement of defective units during ongoing operation

Notes

Note	Cables with a different fire class can be found in the eShop.

Electrical data

Ratings per	IEC/EN 60664-1		
Overvoltage category	III	III	II
Pollution degree	3	2	2
Nominal voltage	400 V	-	-
Rated impulse withstand voltage	6 kV	-	-
Rated current	13 A	-	-

General information	
Note on contact resistance	approx. 1 mΩ of contact resistance approx. 0.25 mΩ contact transition plug/socket

Connection Data

Total number of potentials	5
Conductor preparation	ultrasonically tip-bonded

Connection 1	
Strip length	9 mm / 0.35 inches
Pole number	5
Wire cross-section	1.5 mm²
Strip length (outer insulation)	45 mm
Connection type	Plug - free end

Physical data

Pin spacing	4.4 mm / 0.173 inches
Width	26.7 mm / 1.051 inches
Height	15.8 mm / 0.622 inches
Total length	5 m

Mechanical data

Use	General mains applications
Coding	A
Variable coding	No
Marking	N ⏚ 1 2 3
Potential marking	N ⏚ 1 2 3
Mating force of a plug-in connection	approx. 20 … 70 N (depending on pole number)
Retention force of a plug-in connection	when locked: > 80N
Unmating force of a plug-in connection	when unlocked: approx. 20 … 70 N (depending on pole number)
Number of mating cycles	200, without resistive load
Connection type	Plug - free end
Type of pre-assembled cable	Connecting cable
Cable type	H05VV-F 5G1.5
Protection type	IP20; IP40 when mated

Plug-in connection

Mismating protection	Yes
Note on mismating protection	All *WINSTA*® components are 100% protected against mismating when: a.) plugging different numbers of poles b.) plugging while rotated 180 c.) plugging while laterally staggered d.) plugging one pole
Locking lever	Can be retrofitted
Locking of plug-in connection	Locking lever
Note on locking system	All connectors for mounted installations (snap-in versions for lighting fixtures or devices, all types of PCB and distribution connectors) are factory-equipped with locking levers to ensure plugs and sockets are securely locked. Additional locking levers are only required for flying leads (plug/socket).

 Continued on next page

Material data

Note (material data)	Information on material specifications can be found here
Color	black
Insulation material (main housing)	Polyamide (PA66)
Fire class per EN 50575	E_{ca}
Contact material	Copper or copper alloy; surface-treated
Contact Plating	Tin
Fire load	149.947 MJ
Connector color	black
Strain relief color	black
Sheathed cable color	black
Printing color of sheathed cable	white
Halogen-free	No
Silicon-free	Yes
Sheath material	PVC
Rubber cable	No
Weight	785 g
Copper weight of the raw cable	0.072 kg/m

Environmental requirements

Processing temperature	-5 … +40 °C
Continuous operating temperature	-35 … +85 °C
Note on continuous operating temperature	Cable for temperatures ≤ 70 °C (including halogen-free) Insulating parts for temperatures ≤ 105 °C

Commercial data

PU (SPU)	1 pcs
Packaging type	unpacked
Country of origin	PL
GTIN	4055143386715
Customs tariff number	85444290900

Product Classification

UNSPSC	26121629
eCl@ss 10.0	27-44-06-04
eCl@ss 9.0	27-44-06-04
ETIM 9.0	EC002587
ETIM 10.0	EC002587
ECCN	NO US CLASSIFICATION

Environmental Product Compliance

RoHS Compliance Status	Compliant,No Exemption

 Continued on next page

Approvals / Certificates

General approvals

Approval	Standard	Certificate Name
CCA DEKRA Certification B.V.	EN 61535	NTR NL-7971
KEMA/KEUR DEKRA Certification B.V.	EN 61535	71-123232

Declarations of conformity and manufacturer's declarations

Approval	Standard	Certificate Name
EU-Declaration of Conformity WAGO GmbH & Co. KG	-	-
UK-Declaration of Conformity WAGO GmbH & Co. KG	-	-

Downloads

Environmental Product Compliance

Compliance Search

Environmental Product Compliance
891-8995/206-501

Documentation

Bid Text

891-8995/206-501	19.02.2019	xml 2.98 KB	
891-8995/206-501	01.12.2014	doc 25.00 KB	

CAD/CAE-Data

CAE data

EPLAN Data Portal
891-8995/206-501

WSCAD Universe
891-8995/206-501

1 Compatible Products

1.1 Required Accessories

1.1.1 Locking system

1.1.1.1 Locking system

Item No.: 890-111
Locking lever; for flying leads; for tool operation; black

Item No.: 890-131
Locking lever; for flying leads; for tool operation; white

Item No.: 890-101
Locking lever; for manual operation; black

Item No.: 890-121
Locking lever; for manual operation; white

 Continued on next page

1.2 Optional Accessories

1.2.1 Cover

1.2.1.1 Cover

Item No.: 897-2003
Protective cap; Type2; for sockets and plugs; PVC; red

1.2.2 Installation

1.2.2.1 Mounting accessories

Item No.: 890-310
Mounting carrier; 2- to 5-pole; for flying leads; black

Item No.: 890-311
Mounting carrier; 2- to 5-pole; for flying leads; white