SPARE PARTS

Vanity Unit WH 600 x 440
1 drw

FINESSE

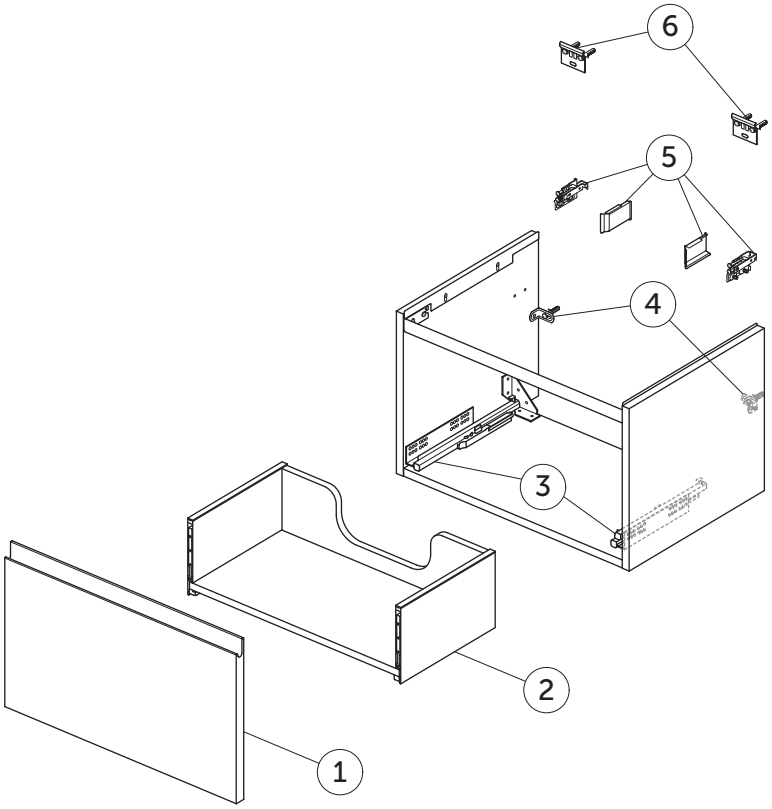

Item	Description	Colour/Finish	Code No.	Quantity
1	Drawer Front Panel 597 x 368	Y1 - Matt White Y2 - Matt Anthracite UP - Matt Greige UQ - Matt Ash Blue Ribbed UR - Dark Elm US - White Oak	EF795Y1 EF795Y2 EF795UP EF795UQ EF795UR EF795US	1
2	Drawer structure box 60 x 44	JE - Graphite Black	EF796JE	1
3	Runners KIT 300mm Hettich Quadro SC		EF77267	pair
4	Safety brackets KIT VU (brackets, screws, plugs)		EF77467	8
5	Hangers KIT INDAUX SCARPI 4		EF77567	pair
6	Wall fixation KIT VU (brackets, screws, plugs)		EF77667	10

Ideal Standard International NV
Corporate Village – Gent Building
Da Vincilaan 2
B1935 – Zaventem
Belgium

BE +32 (02) 325 66 33
BG +359 675 30362
DE +49 (0)228 521 580
EG +202 26969700
FR +33 (0)1 49 38 28 00
GB 01482 496 318
GR +30 210 67 90 810
HR +38591 22 99 304
HU +36 30 6991 594
IT 800 652 290
ME +971 4 804 2400
NL +31 (077) 355 08 08
PL +48 71 7868 301/302
RO +40 21 3223 201/202
SI 00386 59 919040
TR +90 216 314 87 87
UA +359 675 30 468
AL/XK/BA +359 887 709 696
CZ/SK +420 417 592 179
DK/NO/SE +45 75 84 10 10
ES/PT +34 93 561 80 00
LV/LT/EE +371 673 57 792
RS/MK/ME +381 11 713 80 58
RU/MD +7 495 669 23 11

Ideal Standard