Technical data sheet

Strain relief on three sides, empty housing, internal height 115 mm
Item number: 7215762

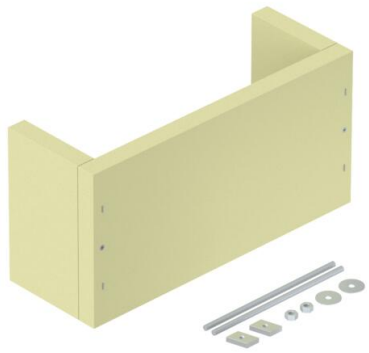

Calcium silicate

Strain relief as an effective support measure for vertical cable routing, according to DIN 4102 Part 12. Approved for all cable types and all vertical routing systems, which are mounted directly on solid walls. Maintenance of electrical function classes E30 to E90. Empty housing for individual filling with the PYROSIT® NG fire protection foam and/or PYROPLUG® Block insulation systems, incl. mounting set and labelling panel.

Master data

Item number	7215762
Type	ZSE90-35-11 L
Description 1	Strain relief
Description 2	for vertical cable routing
Manufacturer	OBO
Dimension	400x140x200
Colour	Cream; RAL 9001
Material	Calcium silicate
Smallest sales unit	1
Unit of quantity	Piece
Weight	390 kg
Weight unit	kg/100 pc.

Technical data sheet

Strain relief on three sides, empty housing, internal height 115 mm

Item number: 7215762

Dimensions

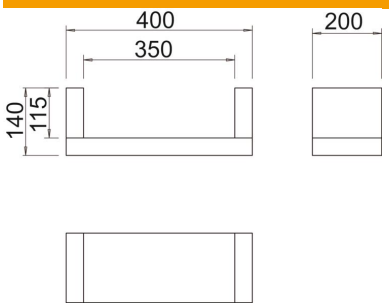

Length	200 mm
Width	400 mm
Height	140 mm
Dimension B	400 mm
Dimension b	350 mm
Dimension H	200 mm
Dimension t	140 mm
Dimension t	115 mm

Technical data

Shape	Rectangular
ROHS-conformant	yes
Accessories required	no