Technical data sheet

Counter-trough, metal universal, DD

Item number: 1199897



Metal counter-trough, for mounting on clamp clip. Can be used universally, irrespective of the rail.

St	Steel
DD	Strip galvanised zinc/aluminium, Double Dip

Master data

Item number	1199897
Type	2058FW M 40 DD
Description 1	Counter-trough
Manufacturer	OBO
Dimension	34-40mm
Material	Steel
Surface	Strip galvanised zinc/aluminium, Double Dip
Surface standard	DIN EN 10346
Smallest sales unit	100
Unit of quantity	Piece
Weight	2.49 kg
Weight unit	kg/100 pc.
CO2 Footprint (GWP) Cradle-to-Gate	0,0734 kg CO2e / 1 Piece

Technical data sheet

Counter-trough, metal universal, DD

Item number: 1199897

Dimensions



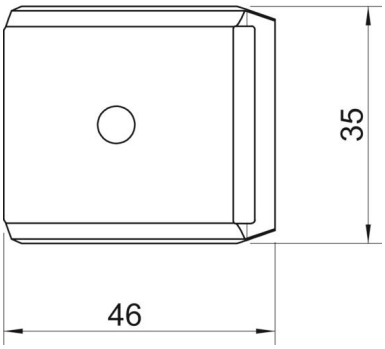

Dimension B	46 mm
Dimension H	15.1 mm
Dimension L	35 mm

Technical data

Counter-trough/clip version	Counter sleeve
Suitable for max. cable diameter	40 mm
Halogen-free	yes
ROHS-conformant	yes
Clamping range D, max.	40 mm
Clamping range D, min.	34 mm