Technical data sheet

Counter-trough, metal, universal A2

Item number: 1197428



Metal counter-trough, for mounting on clamp clip. Can be used universally, irrespective of the rail.

A2	Stainless steel
2B	Bright, treated

Master data

Item number	1197428
Type	2058FW M 40 A2
Description 1	Counter-trough
Manufacturer	OBO
Dimension	34-40mm
Material	Stainless steel 1.4301
Surface	Bright, treated
Surface standard	
Smallest sales unit	100
Unit of quantity	Piece
Weight	2.576 kg
Weight unit	kg/100 pc.
CO2 Footprint (GWP) Cradle-to-Gate	0,1966 kg CO2e / 1 Piece

Technical data sheet

Counter-trough, metal, universal A2

Item number: 1197428

Dimensions



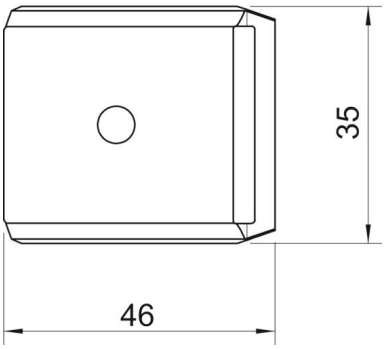

Dimension B	46 mm
Dimension H	15.1 mm
Dimension L	35 mm

Technical data

Counter-trough/clip version	Counter sleeve
Suitable for max. cable diameter	40 mm
Halogen-free	yes
ROHS-conformant	yes
Clamping range D, max.	40 mm
Clamping range D, min.	34 mm