Technical data sheet

Strain relief on four sides, empty housing, internal height 175 mm
Item number: 7215782

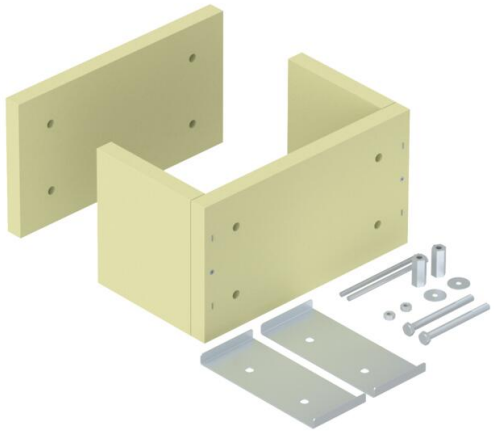

Calcium silicate

Strain relief as an effective support measure for vertical cable routing, according to DIN 4102 Part 12. Approved for all cable types and vertical ladders, created as suspended mounting. Maintenance of electrical function classes E30 to E90. Empty housing for individual filling with the PYROSIT® NG fire protection foam and/or PYROPLUG® Block insulation systems, incl. mounting set and labelling panel.

Master data

Item number	7215782
Type	ZSE90-31-17 LH
Description 1	Strain relief
Description 2	for vertical cable routing
Manufacturer	OBO
Dimension	360x225x200
Colour	Cream; RAL 9001
Material	Calcium silicate
Smallest sales unit	1
Unit of quantity	Piece
Weight	690 kg
Weight unit	kg/100 pc.

Technical data sheet

Strain relief on four sides, empty housing, internal height 175 mm

Item number: 7215782

Dimensions

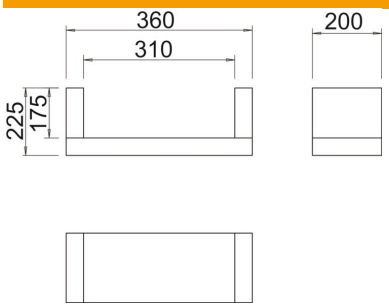

Length	200 mm
Width	360 mm
Height	225 mm
Dimension B	360 mm
Dimension b	310 mm
Dimension H	200 mm
Dimension t	225 mm
Dimension t	175 mm

Technical data

Shape	Rectangular
ROHS-conformant	Exempt