Technical data sheet

External connector

Item number: 6208770

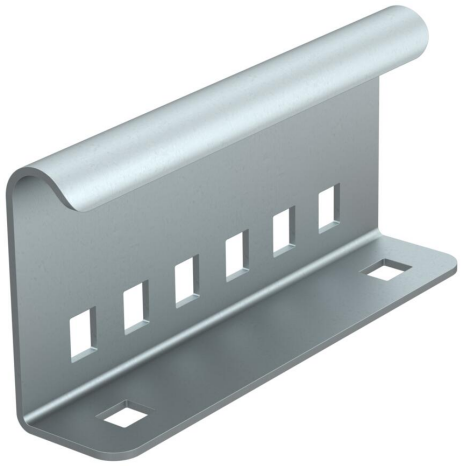

External connector for mechanical connection of cable ladder sections for routing types with cable ladders for the maintenance of electrical function to DIN 4102 Part 12. Including bolts.
Complete with four truss-head bolts of type FRS/M8 x 16-8.8 FT

CE

St	Steel
FS	Strip galvanised

Master data

Item number	6208770
Type	AVL 60 FS
Description 1	Extern.connector,cable ladders
Manufacturer	OBO
Dimension	135x65x30
Colour	zinc
Material	Steel
Surface	Strip galvanised
Surface standard	DIN EN 10346
Smallest sales unit	10
Unit of quantity	Piece
Weight	23.2 kg
Weight unit	kg/100 pc.
CO2 Footprint (GWP) Cradle-to-Gate	0,8711 kg CO2e / 1 Piece

Technical data sheet

External connector

Item number: 6208770

Dimensions

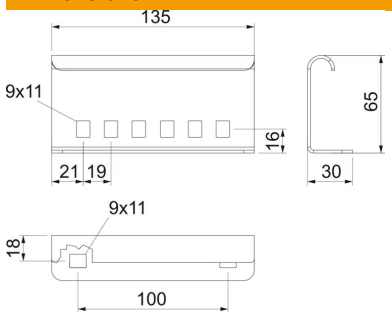

Length	135 mm
Width	30 mm
Height	65 mm
Plate thickness	2 mm

Technical data

Version for	Straight connector
Maintain electrical functions	yes
Suitable for mesh cable tray	no
Suitable for cable ladder	yes
Suitable for cable tray	no
Suitable for cable tray system height	65 mm
Adjustable connector, horizontal	no
Articulated connector, vertical	no
ROHS-conformant	yes
Rustproof steel, pickled	no
Connection type	Screw connector
Wide-span version	no