Data Sheet | Item Number: 757-185

M12 sensor/actuator box; 8-way; 5-pole; M23 connector

https://www.wago.com/757-185



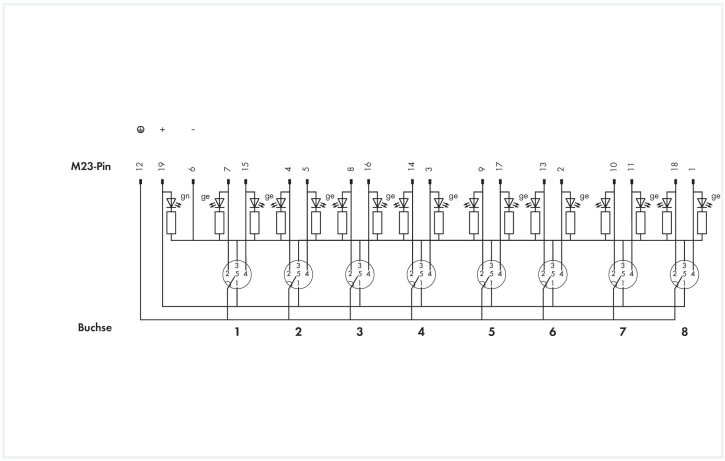

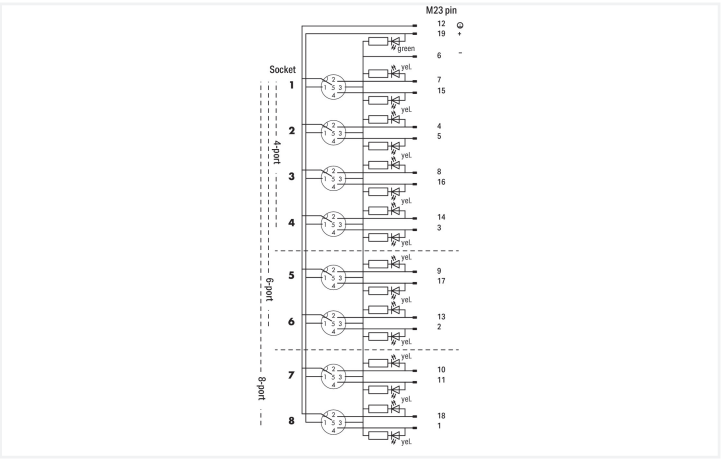

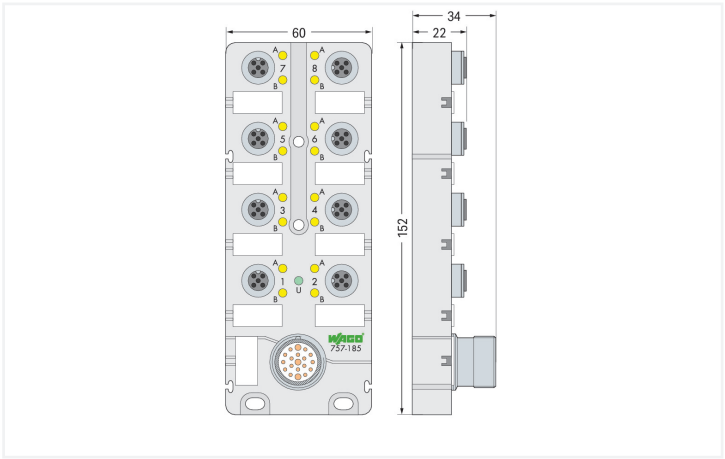

- M12 sensor/actuator box, 8-way
- 5-pole (2 signals per contact)
- M23 connector (19-pole)
- Green LED operating indicator
- Yellow LED status indicator
- incl. markers (10 pcs)
- incl. M12 protective caps (2 pcs)

Technical data	
Contact resistance (max.)	0.01 Ω
Supply voltage	10 … 30 VDC; Rated voltage: 32 V ~ rms
Current carrying capacity (signal connections)	2 A
Current carrying capacity (supply connections)	9 A
Rated value of electrical isolation	500 V
Functionally separated potential groups	Kontakt/Kontakt
Insulation resistance	>10^9 Ω
Signal characteristics	PNP
Indicators	LED (A, B) yellow: Signal status (2 x per contact); LED (U) green: Sensor/actuator box status

Connection data

Connection technology: I/O	8 x M12 socket; 5-pole; incl. ground
Connection technology: trunk cable	1 x M23 plug; 19-pole

Physical data

Width	60 mm / 2.362 inches
Height	34 mm / 1.339 inches
Depth	152 mm / 5.984 inches

Mechanical data

Mounting type	Screw mount
Weight	240 g

Material data

Housing material	PA 66 (UL 94 V0); RAL 7035; silicon and halogen free
Material properties of the connections	Contact: CuSn, nickel base-coat plating and 0.8 µm gold-plated; Threaded bush: die-cast Zn, nickel-plated; Seal: Viton; 50 mating cycles
Encapsulation	Fully encapsulated with conformal coating (UL 94 V0)

Environmental requirements

Ambient temperature (operation)	-25 … +80 °C
Protection type	IP67
Note on protection type	Per EN 60529 (NEMA 6 & 6P) in the fully locked position with its plugs or protective caps
Pollution degree	3 per VDE 0110
Vibration resistance	Per IEC 60068-2-6
Shock resistance	per IEC 60068-2-27

Commercial data

PU (SPU)	1 pcs
Packaging type	Box
Country of origin	DE
GTIN	4050821054344
Customs tariff number	85366990990

Product Classification

UNSPSC	39121421
eCl@ss 10.0	27-44-01-11
eCl@ss 9.0	27-44-01-08
ETIM 9.0	EC003558
ETIM 10.0	EC003558
ECCN	NO US CLASSIFICATION

Continued on next page

Environmental Product Compliance

RoHS Compliance Status	Compliant,With Exemption
RoHS Exemption	6(c)
SCIP notification number (Austria)	9c6afcaf-7a71-48cc-b0cc-ee1cf242a313
SCIP notification number (Belgium)	9eb131bb-74df-4725-9cef-88f7f5e6127a
SCIP notification number (Bulgaria)	83796fd7-8e46-41b5-81cf-23dbd95c6097
SCIP notification number (Czech Republic)	ed4d6d9d-6abf-4b9a-9415-54ca8bbcab97
SCIP notification number (Denmark)	e9d05182-5036-498e-9172-17a4c3c7cbd1
SCIP notification number (Finland)	6149b298-c416-4b2d-8ef5-bfa20b6c9221
SCIP notification number (France)	2de6f2fd-eb66-4547-b3e4-bfa837255a24
SCIP notification number (Germany)	59d7a124-a9f8-48c5-b997-161fa3fa43a8
SCIP notification number (Hungary)	8682635c-6939-4c7e-bba2-638a1171044b
SCIP notification number (Italy)	6a3e1bf3-72af-4d1a-a294-a5e6d16cb2a5
SCIP notification number (Netherlands)	7590237b-ac77-4835-a844-d6ebe4ff2869
SCIP notification number (Poland)	59b02230-7773-4d71-aad8-7dc03ea62db6
SCIP notification number (Romania)	1daaba4f-fe96-4076-95a4-a2168f3eefd7
SCIP notification number (Sweden)	0791c229-1fde-4cbb-97a3-19ca5e4336ab

Approvals / Certificates

General approvals

Approval	Standard	Certificate Name
UL UL International Germany GmbH (ORDINARY LOCATIONS)	UL 508	E175199 Sec.5

Downloads

Environmental Product Compliance

Compliance Search

Environmental Product Compliance 757-185

Documentation

System Description

Sensor/Actuator Boxes – General Product Information	pdf 428.34 KB	

 Continued on next page

CAD/CAE-Data

CAD data

2D/3D Models 757-185

CAE data

EPLAN Data Portal
757-185

WSCAD Universe
757-185

ZUKEN Portal 757-185

1 Compatible Products

1.1 Optional Accessories

1.1.1 Cables and connectors

1.1.1.1 Interconnecting cable



Item No.: 756-3203/190-100
Connecting cable; 19-pole; Length: 10 m



Item No.: 756-3204/190-100
Connecting cable; 19-pole; Length: 10 m



Item No.: 756-3203/190-150
Connecting cable; 19-pole; Length: 15 m



Item No.: 756-3204/190-150
Connecting cable; 19-pole; Length: 15 m



Item No.: 756-3203/190-050
Connecting cable; 19-pole; Length: 5 m



Item No.: 756-3204/190-050
Connecting cable; 19-pole; Length: 5 m

1.1.2 Cover

1.1.2.1 Cover



Item No.: 756-8102
M12 protective cap; for unused sockets

1.1.3 Installation

1.1.3.1 Intermediate plate



Item No.: 757-080
Spacer module for sensor/actuator box; 8-way

1.1.4 Marking

1.1.4.1 Marking device



Item No.: 210-110
Fiber-tip pen

1.1.4.2 Marking strip



Item No.: 757-011
Marker card; not stretchable; snap-on type