Data Sheet | Item Number: 2091-1532/020-000

1-conductor male connector; Push-in CAGE CLAMP®; 1.5 mm²; Pin spacing 3.5 mm; 12-pole; DIN-35 rail/panel mounting; Snap-in mounting feet; Integrated release lever; 1,50 mm²; light gray

https://www.wago.com/2091-1532/020-000

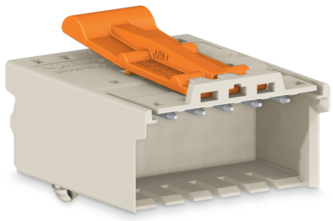

Color: light gray

Similar to illustration

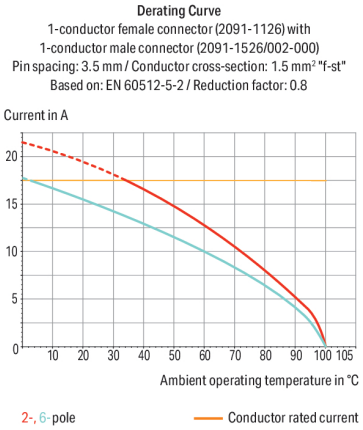

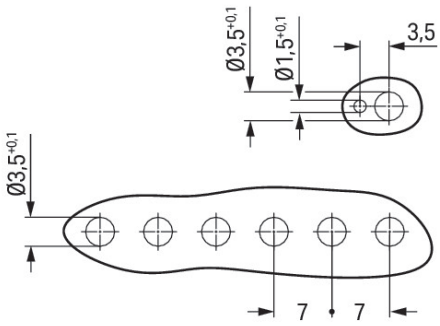

Dimensions in mm

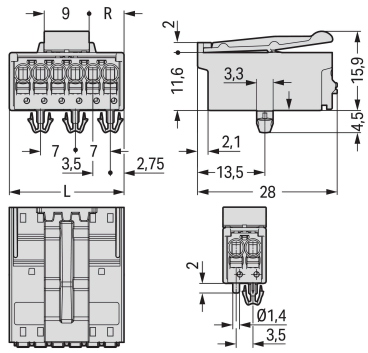

Dimensions in mm
L = (pole no. x pin spacing) + 2 mmEven pole number R = (L – 9 mm) : 2Odd pole number R = (L – 12.5 mm) : 2

Male connector, 2091 Series, push-button

This male connector (item number 2091-1532/020-000) simplifies electrical installations. Strip lengths must be between 8 and 9 mm when connecting conductors to this male connector. This product features one conductor terminal and utilizes Push-in CAGE CLAMP®. Push-in CAGE CLAMP® technology provides a universal connection solution for any type of conductor. It allows both solid and fine-stranded conductors with ferrules to be inserted directly into the clamping point without the need for tools. The dimensions are (44 x 20.4 x 28) mm (width x height x depth). This male connector is suitable for conductor cross sections ranging from 0.2 mm² to 1.5 mm².

Tin is used for coating the contact surfaces.

Notes

Safety Information	The **picoMAX® Pluggable Connection System** includes connectors without breaking capacity in accordance with DIN EN 61984. When used as intended, these connectors must not be connected/disconnected when live or under load.When used as intended, these connectors must not be connected/disconnected when live or under load. The circuit design should ensure header pins, which can be touched, are not live when un-mated.
Safety information 2	The use of ferrules is recommended for applications with higher requirements. To prevent excessive force on the clamping point, effective cable strain relief must be used.
Variants:	Direct marking Other versions (or variants) can be requested from WAGO Sales or configured at https://configurator.wago.com/.

Electrical data

Ratings per	IEC/EN 60664-1		
Overvoltage category	III	III	II
Pollution degree	3	2	2
Nominal voltage	160 V	160 V	320 V
Rated impulse withstand voltage	2.5 kV	2.5 kV	2.5 kV
Rated current	10 A	10 A	10 A

Approvals per	UL 1059		
Use group	B	C	D
Rated voltage	300 V	-	300 V
Rated current	10 A	-	10 A

Connection Data

Clamping units	12
Total number of potentials	12
Number of connection types	1
Number of levels	1

Connection 1

Connection technology	Push-in CAGE CLAMP®
Actuation type	Push-button
Actuation direction 1	Operation parallel to conductor entry
Solid conductor	0.2 … 1.5 mm² / 24 … 14 AWG
Fine-stranded conductor	0.2 … 1.5 mm² / 24 … 14 AWG
Fine-stranded conductor; with insulated ferrule	0.25 … 0.75 mm²
Fine-stranded conductor; with uninsulated ferrule	0.25 … 1.5 mm²
Strip length	8 … 9 mm / 0.31 … 0.35 inches
Pole number	12

Physical data

Pin spacing	3.5 mm / 0.138 inches
Width	44 mm / 1.732 inches
Height	20.4 mm / 0.803 inches
Height from the surface	15.9 mm
Depth	28 mm / 1.102 inches
Drilled hole diameter for snap-in mounting foot with tolerance	3.5 $^{(+0.1)}$ mm

Mechanical data

Variable coding	Yes
Housing sheet thickness	0.6 … 1.2 mm / 0.024 … 0.047 inches
Mounting type	Snap-in foot
Anti-rotation protection	Yes

Plug-in connection

Contact type (pluggable connector)	Male connector/plug
Connector (connection type)	for conductor
Mismating protection	No
Plugging without loss of pin spacing	Yes
Locking of plug-in connection	Locking latch

Material data

Note (material data)	Information on material specifications can be found here
Color	light gray
Material group	I
Insulation material (main housing)	Polyphthalamide (PPA GF)
Flammability class per UL94	V0
Clamping spring material	Chrome-nickel spring steel (CrNi)
Contact material	Electrolytic copper (E_{Cu})
Contact Plating	Tin
Fire load	0.032 MJ
Weight	11.4 g

Environmental requirements

Limit temperature range	-60 … +100 °C
Processing temperature	-35 … +60 °C

Commercial data

PU (SPU)	50 pcs
Packaging type	Box
Country of origin	DE
GTIN	4055143543484
Customs tariff number	85366930000

Product Classification

UNSPSC	39121409
eCl@ss 10.0	27-14-11-06
eCl@ss 9.0	27-14-11-06
ETIM 9.0	EC001284
ETIM 10.0	EC001284
ECCN	NO US CLASSIFICATION

 Continued on next page

Environmental Product Compliance

RoHS Compliance Status	Compliant,No Exemption

Approvals / Certificates

General approvals

Approval	Standard	Certificate Name
CB DEKRA Certification B.V.	IEC 61984	NL-89884
CSA CSA Group	C22.2	2362521
CSA DEKRA Certification B.V.	C22.2 No. 158	2362521
KEMA/KEUR DEKRA Certification B.V.	EN 61984	71-129873
UL Underwriters Laboratories Inc.	UL 1977	E45171

Downloads

Environmental Product Compliance

Compliance Search

Environmental Product Compliance 2091-1532/020-000

Documentation

Additional Information

Technical Section	03.04.2019	pdf 2027.26 KB

CAD/CAE-Data

CAD data

2D/3D Models 2091-1532/020-000

CAE data

ZUKEN Portal 2091-1532/020-000

1 Compatible Products

1.1 System counterpart

1.1.1 Female connector/socket



Item No.: 2091-1132
1-conductor female connector; push-button; Push-in CAGE CLAMP®; 1.5 mm²; Pin spacing 3.5 mm; 12-pole; 1,50 mm²; light gray

1.2 Optional Accessories

1.2.1 Coding

1.2.1.1 Coding



Item No.: 2091-1610
Coding key carrier; suitable for 3.5 mm pin spacing; orange

1.2.2 Ferrule

1.2.2.1 Ferrule

Item No.: 216-301
Ferrule; Sleeve for 0.25 mm² / AWG 24; insulated; electro-tin plated; yellow

Item No.: 216-131
Ferrule; Sleeve for 0.25 mm² / AWG 24; uninsulated; electro-tin plated; silver-colored

Item No.: 216-302
Ferrule; Sleeve for 0.34 mm² / 22 AWG; insulated; electro-tin plated; light turquoise

Item No.: 216-132
Ferrule; Sleeve for 0.34 mm² / AWG 24; uninsulated; electro-tin plated



Item No.: 216-101
Ferrule; Sleeve for 0.5 mm² / AWG 22; uninsulated; electro-tin plated; silver-colored

Item No.: 216-202
Ferrule; Sleeve for 0.75 mm² / 18 AWG; insulated; electro-tin plated; gray



Item No.: 216-102
Ferrule; Sleeve for 0.75 mm² / AWG 20; uninsulated; electro-tin plated; silver-colored



Item No.: 216-122
Ferrule; Sleeve for 0.75 mm² / AWG 20; uninsulated; electro-tin plated; silver-colored

Item No.: 216-203
Ferrule; Sleeve for 1 mm² / AWG 18; insulated; electro-tin plated; red

Item No.: 216-103
Ferrule; Sleeve for 1 mm² / AWG 18; uninsulated; electro-tin plated

Item No.: 216-143
Ferrule; Sleeve for 1 mm² / AWG 18; uninsulated; electro-tin plated; electrolytic copper; gastight crimped; acc. to DIN 46228, Part 1/08.92



Item No.: 216-204
Ferrule; Sleeve for 1.5 mm² / AWG 16; insulated; electro-tin plated; black

Item No.: 216-144
Ferrule; Sleeve for 1.5 mm² / AWG 16; uninsulated; electro-tin plated; electrolytic copper; gastight crimped; acc. to DIN 46228, Part 1/08.92; silver-colored

Item No.: 216-104
Ferrule; Sleeve for 1.5 mm² / AWG 16; uninsulated; electro-tin plated; silver-colored



Item No.: 216-106
Ferrule; Sleeve for 2.5 mm² / AWG 14; uninsulated; electro-tin plated; silver-colored

 Continued on next page

1.2.3 Test and measurement

1.2.3.1 Testing accessories



Item No.: 735-500
WAGO Test pin; 1 mm Ø; 30 V AC / 60 V DC; CAT0; 1 A; 6 mm uninsulated; Test lead for soldering up to 0,5mm²

1.2.4 Tool

1.2.4.1 Operating tool



Item No.: 210-719
Operating tool; Blade: 2.5 x 0.4 mm; with a partially insulated shaft