Data Sheet | Item Number: 2202-1911

2-conductor fuse terminal block; with pivoting fuse holder; with additional jumper position; for 5 x 20 mm miniature metric fuse; with push-button; without blown fuse indication; for DIN-rail 35 x 15 and 35 x 7.5; 2.5 mm²; Push-in CAGE CLAMP®; 2,50 mm²; gray

https://www.wago.com/2202-1911

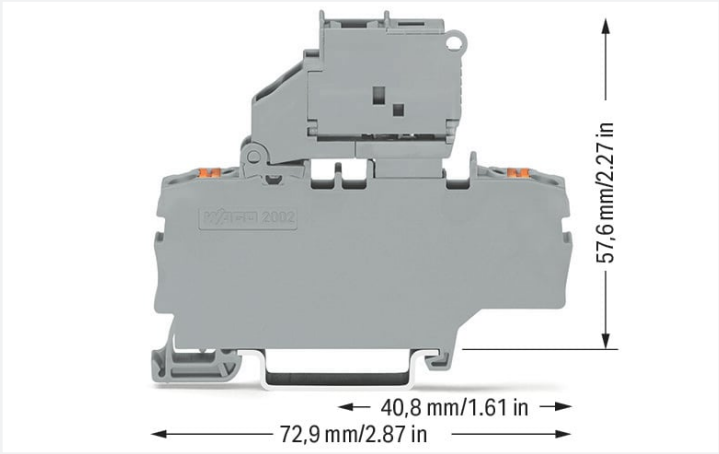

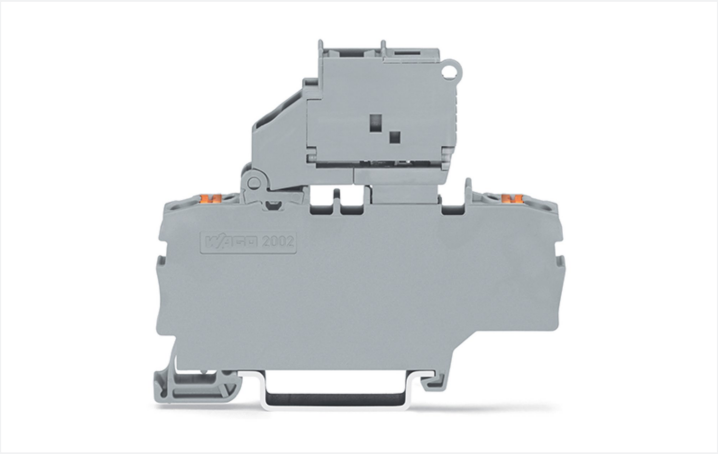

Color: gray

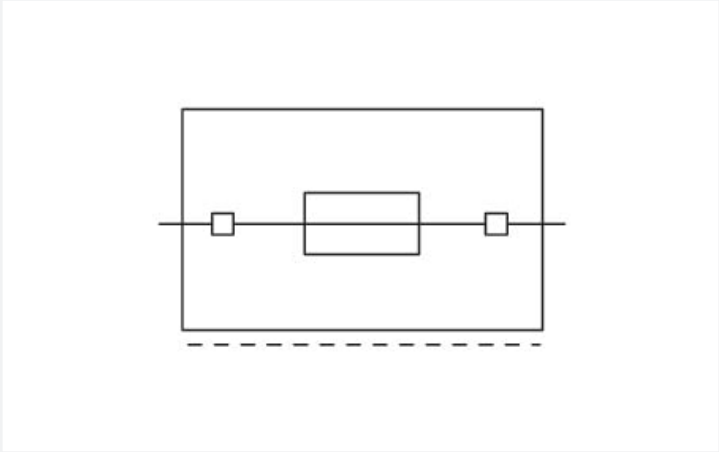

Fuse terminal block, 2202 Series, Push-in CAGE CLAMP®

Our fuse terminal block (item number 2202-1911) makes connections quick and easy. Strip lengths must be between 10 mm and 12 mm when connecting conductors to this fuse terminal block. This product features conductor terminals and utilizes Push-in CAGE CLAMP®. Push-in CAGE CLAMP® technology provides a universal connection solution for all conductor types. It allows both solid and fine-stranded conductors with ferrules to be inserted directly into the clamping point without the need for tools. This fuse terminal block is suitable for conductor cross sections ranging from 0.25 mm² to 4 mm². It features one level and two clamping points that you can use to connect a single potential. The gray housing is made of polyamide (PA66) for insulation. These function terminal blocks are mounted using DIN-35 rails.. This product is designed for specific Ex applications (please refer to the product datasheet).

Electrical data

Ratings per	IEC/EN 60947-7-3		
Overvoltage category	III	III	II
Pollution degree	3	2	2
Nominal voltage	250 V	-	-
Rated surge voltage	6 kV	-	-
Rated current	6.3 A	-	-

Ratings per IEC/EN – Notes	
Ratings (note)	Electrical ratings are given by the fuse.

Continued on next page

Approvals per	UL 1059		
Use group	B	C	D
Rated voltage	250 V	250 V	250 V
Rated current	10 A	10 A	-

Approvals per	CSA 22.2 No 158		
Use group	B	C	D
Rated voltage	250 V	250 V	250 V
Rated current	10 A	10 A	10 A

Ex information

Reference hazardous areas	See “Downloads – Documentation – Additional Information: Technical Section; Technical Explications”
Ratings per	ATEX: PTB 20 ATEX 1007 U / IECEx: PTB 20.0013U (Ex ec IIC Gc)
Rated voltage EN (Ex e II)	275 V
Rated current (Ex e II)	6.3 A

Power Loss

Power loss P_l max. overload and short-circuit protection (individual arrangement)	1.6 W
Power loss P_l max. overload and short-circuit protection (group arrangement)	1.6 W
Power loss P_l max. short-circuit protection (individual arrangement)	1.6 W
Power loss P_l max. short-circuit protection (group arrangement)	1.6 W

General information

Fuse receptacle	pivoting
Fuse type	Cylindrical fuse; 5 x 20 mm

Connection data

Clamping units	2
Total number of potentials	1
Number of levels	1
Number of jumper slots	3

Connection 1

Connection technology	Push-in CAGE CLAMP®
Actuation type	Push-button
Connectable conductor materials	Copper
Nominal cross-section	2.5 mm²
Solid conductor	0.25 … 4 mm² / 22 … 12 AWG
Solid conductor; push-in termination	0.75 … 4 mm² / 18 … 12 AWG
Fine-stranded conductor	0.25 … 4 mm² / 22 … 12 AWG
Fine-stranded conductor; with insulated ferrule	0.25 … 2.5 mm² / 22 … 14 AWG
Fine-stranded conductor; with ferrule; push-in termination	1 … 2.5 mm² / 18 … 14 AWG
Note (conductor cross-section)	Depending on the conductor characteristic, a conductor with a smaller cross-section can also be inserted via push-in termination.
Strip length	10 … 12 mm / 0.39 … 0.47 inches
Wiring direction	Front-entry wiring

Physical data

Width	6.2 mm / 0.244 inches
Height	72.9 mm / 2.87 inches
Depth from upper-edge of DIN-rail	57.6 mm / 2.268 inches

 Continued on next page

Mechanical data

Mounting type	DIN-35 rail
Marking level	Center/side marking

Material data

Note (material data)	Information on material specifications can be found here
Color	gray
Material group	I
Insulation material (main housing)	Polyamide (PA66)
Flammability class per UL94	V0
Fire load	0.318 MJ
Actuator color	orange
Weight	14.3 g

Environmental requirements

Processing temperature	-35 ... +85 °C
Continuous operating temperature	-60 ... +105 °C

Commercial data

ETIM 9.0	EC000899
ETIM 8.0	EC000899
PU (SPU)	50 pcs
Packaging type	Box
Country of origin	DE
GTIN	4055143962001
Customs tariff number	85369095000

Environmental Product Compliance

RoHS Compliance Status	Compliant,No Exemption

Approvals / Certificates

General approvals

Approval	Standard	Certificate Name
CSA DEKRA Certification B.V.	C22.2	70173745
UL Underwriters Laboratories Inc.	UL 1059	UL-CA-L45172-6189178-11508102-1

Declarations of conformity and manufacturer's declarations

Approval	Standard	Certificate Name
ATEX-Attestation of Conformity WAGO GmbH & Co. KG	-	-
EU-Declaration of Conformity WAGO GmbH & Co. KG	-	-
UK-Declaration of Conformity WAGO GmbH & Co. KG	-	-

 Continued on next page

Approvals for hazardous areas

Approval	Standard	Certificate Name
AEx Underwriters Laboratories Inc.	UL 60079	E185892 (AEx eb IIC resp. Ex eb IIC)
ATEX Physikalisch Technische Bundesanstalt	EN IEC 60079-0	PTB 20 ATEX 1007U (II 3 G Ex ec IIC Gc)
CCC CNEX	-	2020312313000288 (Ex ec IIC Gc)
IECEx Physikalisch Technische Bundesanstalt	IEC 60079	IECEx PTB 20.0013U (Ex ec IIC Gc)

Downloads

Environmental Product Compliance

Compliance Search

Environmental Product Compliance 2202-1911

Documentation

Additional Information

Technical Section	pdf 2246.92 KB	

CAD/CAE-Data

CAD data

2D/3D Models 2202-1911

1 Compatible Products

1.1 Required Accessories

1.1.1 End plate

1.1.1.1 End plate

Item No.: 2002-991
End plate for fuse terminal blocks; 2 mm thick; gray

Item No.: 2002-992
End plate for fuse terminal blocks; 2 mm thick; orange

Item No.: 209-191
Separator for Ex e/Ex i applications; 3 mm thick; 120 mm wide; orange

 Continued on next page

1.2 Optional Accessories

1.2.1 DIN-rail

1.2.1.1 Mounting accessories

Item No.: 210-196
Aluminum carrier rail; 35 x 8.2 mm; 1.6 mm thick; 2 m long; unslotted; similar to EN 60715; silver-colored

Item No.: 210-198
Copper carrier rail; 35 x 15 mm; 2.3 mm thick; 2 m long; unslotted; according to EN 60715; copper-colored

Item No.: 210-508
Steel carrier rail; 35 x 15 mm; 1.5 mm thick; 2 m long; slotted; galvanized; similar to EN 60715; silver-colored

Item No.: 210-197
Steel carrier rail; 35 x 15 mm; 1.5 mm thick; 2 m long; slotted; similar to EN 60715; silver-colored

Item No.: 210-506
Steel carrier rail; 35 x 15 mm; 1.5 mm thick; 2 m long; unslotted; galvanized; similar to EN 60715; silver-colored

Item No.: 210-114
Steel carrier rail; 35 x 15 mm; 1.5 mm thick; 2 m long; unslotted; similar to EN 60715; silver-colored

Item No.: 210-118
Steel carrier rail; 35 x 15 mm; 2.3 mm thick; 2 m long; unslotted; according to EN 60715; silver-colored

Item No.: 210-115
Steel carrier rail; 35 x 7.5 mm; 1 mm thick; 2 m long; slotted; according to EN 60715; "Hole width 18 mm; silver-colored

Item No.: 210-112
Steel carrier rail; 35 x 7.5 mm; 1 mm thick; 2 m long; slotted; according to EN 60715; "Hole width 25 mm; silver-colored

Item No.: 210-504
Steel carrier rail; 35 x 7.5 mm; 1 mm thick; 2 m long; slotted; galvanized; according to EN 60715; silver-colored

Item No.: 210-113
Steel carrier rail; 35 x 7.5 mm; 1 mm thick; 2 m long; unslotted; according to EN 60715; silver-colored

Item No.: 210-505
Steel carrier rail; 35 x 7.5 mm; 1 mm thick; 2 m long; unslotted; galvanized; according to EN 60715; silver-colored

1.2.2 Ferrule

1.2.2.1 Ferrule

Item No.: 216-241
Ferrule; Sleeve for 0.5 mm² / 20 AWG; insulated; electro-tin plated; electrolytic copper; gastight crimped; acc. to DIN 46228, Part 4/09.90; white

Item No.: 216-242
Ferrule; Sleeve for 0.75 mm² / 18 AWG; insulated; electro-tin plated; electrolytic copper; gastight crimped; acc. to DIN 46228, Part 4/09.90; gray

Item No.: 216-262
Ferrule; Sleeve for 0.75 mm² / 18 AWG; insulated; electro-tin plated; electrolytic copper; gastight crimped; acc. to DIN 46228, Part 4/09.90; gray

Item No.: 216-243
Ferrule; Sleeve for 1 mm² / AWG 18; insulated; electro-tin plated; electrolytic copper; gastight crimped; acc. to DIN 46228, Part 4/09.90; red

Item No.: 216-263
Ferrule; Sleeve for 1 mm² / AWG 18; insulated; electro-tin plated; electrolytic copper; gastight crimped; acc. to DIN 46228, Part 4/09.90; red

Item No.: 216-244
Ferrule; Sleeve for 1.5 mm² / AWG 16; insulated; electro-tin plated; electrolytic copper; gastight crimped; acc. to DIN 46228, Part 4/09.90; black

Item No.: 216-264
Ferrule; Sleeve for 1.5 mm² / AWG 16; insulated; electro-tin plated; electrolytic copper; gastight crimped; acc. to DIN 46228, Part 4/09.90; black

Item No.: 216-246
Ferrule; Sleeve for 2.5 mm² / AWG 14; insulated; electro-tin plated; electrolytic copper; gastight crimped; acc. to DIN 46228, Part 4/09.90; blue

Item No.: 216-266
Ferrule; Sleeve for 2.5 mm² / AWG 14; insulated; electro-tin plated; electrolytic copper; gastight crimped; acc. to DIN 46228, Part 4/09.90; blue

1.2.3 Installation

1.2.3.1 Cover

Item No.: 709-156
Cover; Type 3; suitable for cover carrier, type 3; 1 m long; transparent

 Continued on next page

1.2.3.2 Cover carrier

Item No.: 709-169
Cover carrier; Type 3; incl. fixing/retaining screws and knurled nut; suitable for 279 to 282 and 880 Series rail-mounted terminal blocks; suitable for 264 Series miniature rail-mounted terminal blocks; suitable for 270 Series sensor and actuator terminal blocks; gray

1.2.4 Insulation stop

1.2.4.1 Insulation stop

Item No.: 2002-171
Insulation stop; 0.25 - 0.5 mm²; 5 pieces/ strip; light gray

Item No.: 2002-172
Insulation stop; 0.75 - 1 mm²; 5 pieces/ strip; dark gray

1.2.5 Jumper

1.2.5.1 Jumper

Item No.: 2004-406/020-000
Delta jumper; insulated; light gray

Item No.: 2004-410
Jumper; 10-way; insulated; light gray

Item No.: 2004-402
Jumper; 2-way; insulated; light gray

Item No.: 2004-403
Jumper; 3-way; insulated; light gray

Item No.: 2004-404
Jumper; 4-way; insulated; light gray

Item No.: 2004-405
Jumper; 5-way; insulated; light gray

Item No.: 2004-406
Jumper; 6-way; insulated; light gray

Item No.: 2004-407
Jumper; 7-way; insulated; light gray

Item No.: 2004-408
Jumper; 8-way; insulated; light gray

Item No.: 2004-409
Jumper; 9-way; insulated; light gray

Item No.: 2004-440
Jumper; from 1 to 10; insulated; light gray

Item No.: 2004-433
Jumper; from 1 to 3; insulated; light gray

Item No.: 2004-434
Jumper; from 1 to 4; insulated; light gray

Item No.: 2004-435
Jumper; from 1 to 5; insulated; light gray

Item No.: 2004-436
Jumper; from 1 to 6; insulated; light gray

Item No.: 2004-437
Jumper; from 1 to 7; insulated; light gray

Item No.: 2004-438
Jumper; from 1 to 8; insulated; light gray

Item No.: 2004-439
Jumper; from 1 to 9; insulated; light gray

Item No.: 2004-405/011-000
Star point jumper; 3-way; insulated; light gray

Item No.: 210-103
Wire commoning chain; insulated; black

Item No.: 210-123
Wire commoning chain; insulated; blue

 Continued on next page

1.2.6 Locking system

1.2.6.1 Locking system

Item No.: 210-254
Interlocking link; mechanically locks multiple links; 1 m long; transparent

1.2.7 Marking

1.2.7.1 Group marker carrier

Item No.: 2009-191
Group marker carrier; gray

Item No.: 2009-192
Group marker carrier; gray

Item No.: 2009-193
Group marker carrier; gray

1.2.7.2 Marker

Item No.: 2009-145/000-006
Mini-WSB Inline; for Smart Printer; 1700 pieces on roll; stretchable 5 - 5.2 mm; plain; snap-on type; blue

Item No.: 2009-145/000-007
Mini-WSB Inline; for Smart Printer; 1700 pieces on roll; stretchable 5 - 5.2 mm; plain; snap-on type; gray

Item No.: 2009-145/000-023
Mini-WSB Inline; for Smart Printer; 1700 pieces on roll; stretchable 5 - 5.2 mm; plain; snap-on type; green

Item No.: 2009-145/000-012
Mini-WSB Inline; for Smart Printer; 1700 pieces on roll; stretchable 5 - 5.2 mm; plain; snap-on type; orange

Item No.: 2009-145/000-005
Mini-WSB Inline; for Smart Printer; 1700 pieces on roll; stretchable 5 - 5.2 mm; plain; snap-on type; red

Item No.: 2009-145/000-024
Mini-WSB Inline; for Smart Printer; 1700 pieces on roll; stretchable 5 - 5.2 mm; plain; snap-on type; violet

Item No.: 2009-145
Mini-WSB Inline; for Smart Printer; 1700 pieces on roll; stretchable 5 - 5.2 mm; plain; snap-on type; white

Item No.: 2009-145/000-002
Mini-WSB Inline; for Smart Printer; 1700 pieces on roll; stretchable 5 - 5.2 mm; plain; snap-on type; yellow

Item No.: 248-501/000-006
Mini-WSB marking card; as card; not stretchable; plain; snap-on type; blue

Item No.: 248-501/000-007
Mini-WSB marking card; as card; not stretchable; plain; snap-on type; gray

Item No.: 248-501/000-023
Mini-WSB marking card; as card; not stretchable; plain; snap-on type; green

Item No.: 248-501/000-017
Mini-WSB marking card; as card; not stretchable; plain; snap-on type; light green

Item No.: 248-501/000-012
Mini-WSB marking card; as card; not stretchable; plain; snap-on type; orange

Item No.: 248-501/000-005
Mini-WSB marking card; as card; not stretchable; plain; snap-on type; red

Item No.: 248-501/000-024
Mini-WSB marking card; as card; not stretchable; plain; snap-on type; violet

Item No.: 248-501
Mini-WSB marking card; as card; not stretchable; plain; snap-on type; white

Item No.: 248-501/000-002
Mini-WSB marking card; as card; not stretchable; plain; snap-on type; yellow

Item No.: 793-5501/000-006
WMB marking card; as card; for terminal block width 5 - 17.5 mm; stretchable 5 - 5.2 mm; plain; snap-on type; blue

Item No.: 793-5501/000-014
WMB marking card; as card; for terminal block width 5 - 17.5 mm; stretchable 5 - 5.2 mm; plain; snap-on type; brown

Item No.: 793-5501/000-007
WMB marking card; as card; for terminal block width 5 - 17.5 mm; stretchable 5 - 5.2 mm; plain; snap-on type; gray

Item No.: 793-5501/000-023
WMB marking card; as card; for terminal block width 5 - 17.5 mm; stretchable 5 - 5.2 mm; plain; snap-on type; green

Item No.: 793-5501/000-017
WMB marking card; as card; for terminal block width 5 - 17.5 mm; stretchable 5 - 5.2 mm; plain; snap-on type; light green

Item No.: 793-5501/000-012
WMB marking card; as card; for terminal block width 5 - 17.5 mm; stretchable 5 - 5.2 mm; plain; snap-on type; orange

Item No.: 793-5501/000-005
WMB marking card; as card; for terminal block width 5 - 17.5 mm; stretchable 5 - 5.2 mm; plain; snap-on type; red

Item No.: 793-5501/000-024
WMB marking card; as card; for terminal block width 5 - 17.5 mm; stretchable 5 - 5.2 mm; plain; snap-on type; violet

Item No.: 793-5501
WMB marking card; as card; for terminal block width 5 - 17.5 mm; stretchable 5 - 5.2 mm; plain; snap-on type; white

Item No.: 793-5501/000-002
WMB marking card; as card; for terminal block width 5 - 17.5 mm; stretchable 5 - 5.2 mm; plain; snap-on type; yellow

Item No.: 2009-115/000-006
WMB-Inline; for Smart Printer; 1500 pieces on roll; stretchable 5 - 5.2 mm; plain; snap-on type; blue

Item No.: 2009-115/000-007
WMB-Inline; for Smart Printer; 1500 pieces on roll; stretchable 5 - 5.2 mm; plain; snap-on type; gray

Item No.: 2009-115/000-023
WMB-Inline; for Smart Printer; 1500 pieces on roll; stretchable 5 - 5.2 mm; plain; snap-on type; green

Item No.: 2009-115/000-017
WMB-Inline; for Smart Printer; 1500 pieces on roll; stretchable 5 - 5.2 mm; plain; snap-on type; light green

Item No.: 2009-115/000-012
WMB-Inline; for Smart Printer; 1500 pieces on roll; stretchable 5 - 5.2 mm; plain; snap-on type; orange

 Continued on next page

1.2.7.2 Marker

Item No.: 2009-115/000-005
WMB-Inline; for Smart Printer; 1500 pieces on roll; stretchable 5 - 5.2 mm; plain; snap-on type; red

Item No.: 2009-115/000-024
WMB-Inline; for Smart Printer; 1500 pieces on roll; stretchable 5 - 5.2 mm; plain; snap-on type; violet

Item No.: 2009-115
WMB-Inline; for Smart Printer; 1500 pieces on roll; stretchable 5 - 5.2 mm; plain; snap-on type; white

Item No.: 2009-115/000-002
WMB-Inline; for Smart Printer; 1500 pieces on roll; stretchable 5 - 5.2 mm; plain; snap-on type; yellow

1.2.7.3 Marker carrier

Item No.: 2009-198
Adaptor; gray

1.2.7.4 Marking strip

Item No.: 2009-110
Marking strips; for Smart Printer; on reel; not stretchable; plain; snap-on type; white

1.2.8 Push-in type wire jumper

1.2.8.1 Jumper

Item No.: 2009-414
Push-in type wire jumper; 1.5 mm²; insulated; 110 mm long; black

Item No.: 2009-414/000-005
Push-in type wire jumper; 1.5 mm²; insulated; 110 mm long; black

Item No.: 2009-416
Push-in type wire jumper; 1.5 mm²; insulated; 250 mm long; black

Item No.: 2009-414/000-006
Push-in type wire jumper; insulated; 110 mm long; black

Item No.: 2009-412
Push-in type wire jumper; insulated; 60 mm long; black

1.2.9 Screwless end stop

1.2.9.1 Mounting accessories

Item No.: 249-117
Screwless end stop; 10 mm wide; for DIN-rail 35 x 15 and 35 x 7.5; gray

Item No.: 249-116
Screwless end stop; 6 mm wide; for DIN-rail 35 x 15 and 35 x 7.5; gray

1.2.10 Test and measurement

1.2.10.1 Testing accessories

Item No.: 210-136
Test plug; 2 mm Ø; with 500 mm cable; red

 Continued on next page

1.2.11 Tool

1.2.11.1 Operating tool

Item No.: 210-658
Operating tool; Blade: 3.5 x 0.5 mm; with a partially insulated shaft; angled; short; multicoloured

Item No.: 210-720
Operating tool; Blade: 3.5 x 0.5 mm; with a partially insulated shaft; multicoloured

Installation Notes

Conductor termination

All conductor types at a glance

Push-in termination of solid and ferruled conductors

Push-in termination of solid and ferruled conductors

Insert fine-stranded conductors via operating tool.

Removing all conductors via operating tool.

Commoning

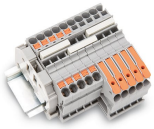

Insert a push-in type jumper bar and push down until it hits the backstop.

 Continued on next page

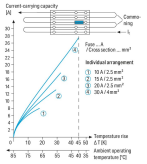

Application Notes on Terminal Blocks for Glass Cartridge Fuses
Diagram: “Individual Arrangement”

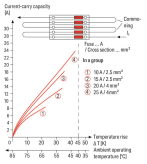

Application Notes on Terminal Blocks for Glass Cartridge Fuses
Diagram: “Block Arrangement”

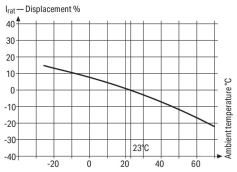

Application Notes on Terminal Blocks for Glass Cartridge Fuses
Nominal current ratings for fuse cartridges are defined differently in international standards. This is why the recommended continuous current-carrying capacity of the fuses is a max. 80% of their nominal current according to DIN 72581/ Part 3 (for a surrounding air temperature of 23°C).
Selecting the correct fuse cartridge is important for product safety within applications, as well as for fuse cartridge service life and reliability. Fuse cartridges will only operate perfectly as protection components (break-off point) if they are properly selected and used as intended (i.e., according to the state of the technology and valid specifications, as well as data sheet characteristics), according to basic safety requirements (i.e., persons, animals and property must be protected against hazards).

Information from the mini-automotive, blade-type fuse manufacturers

Derating Tamb /°C	%	F_T
- 25	14	0,877
- 20	13	0,885
- 15	12	0,893
- 10	11	0,901
- 5	10	0,909
0	9	0,917
5	8	0,926
10	6	0,943
15	4	0,962
20	2	0,980
23	0	1,000
30	- 2	1,020
35	- 4	1,042
40	- 6	1,064
45	- 8	1,087
50	- 10	1,111
55	- 13	1,140
60	- 16	1,190
65	- 19	1,235
70	- 22	1,282

Concerning product safety, fuse cartridges must generally be tested under both normal and faulty operating conditions within your application.

Marking

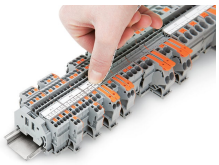

Snapping a marking strip into a marker slot.

Snapping a marking strip into the marker slot.