Spare Parts / Ersatzteile / Pièces de recharge / Pezzi di Ricambio / Piezas de requesto / Parte de reposição / Reserveonderdelen / Reservdelar / Reservedeler / Varaosat / Vraosat / Varahlutir / Ανταλλακτικά / Yedek Parçalar / Náhradní díly / Náhradné diely / Nadomestni deli / Резервни части / Запчасти / Części Zapasowe / Piese de schimb / Rendelhető alkatrészek / Запасні частини / Reservni delovi / Резервни делови / Резервни делови / Atsarginių dalių / Tellitavad varuosad / Rezervju daļu

XX = AA, AD...

Position

1 = A 961 449 XX
2 = A 961 823 XX
3 = A 961 824 NU
4 = E 960 575 NU
7 = A 961 825 XX
8a = A 961 302 NU
8b = S 960 193 NU
10 = A 962 991 XX
11 = A 963 404 NU
12 = A 960 016 NU
13 = A 961 838 XX
14 = A 962 140 NU

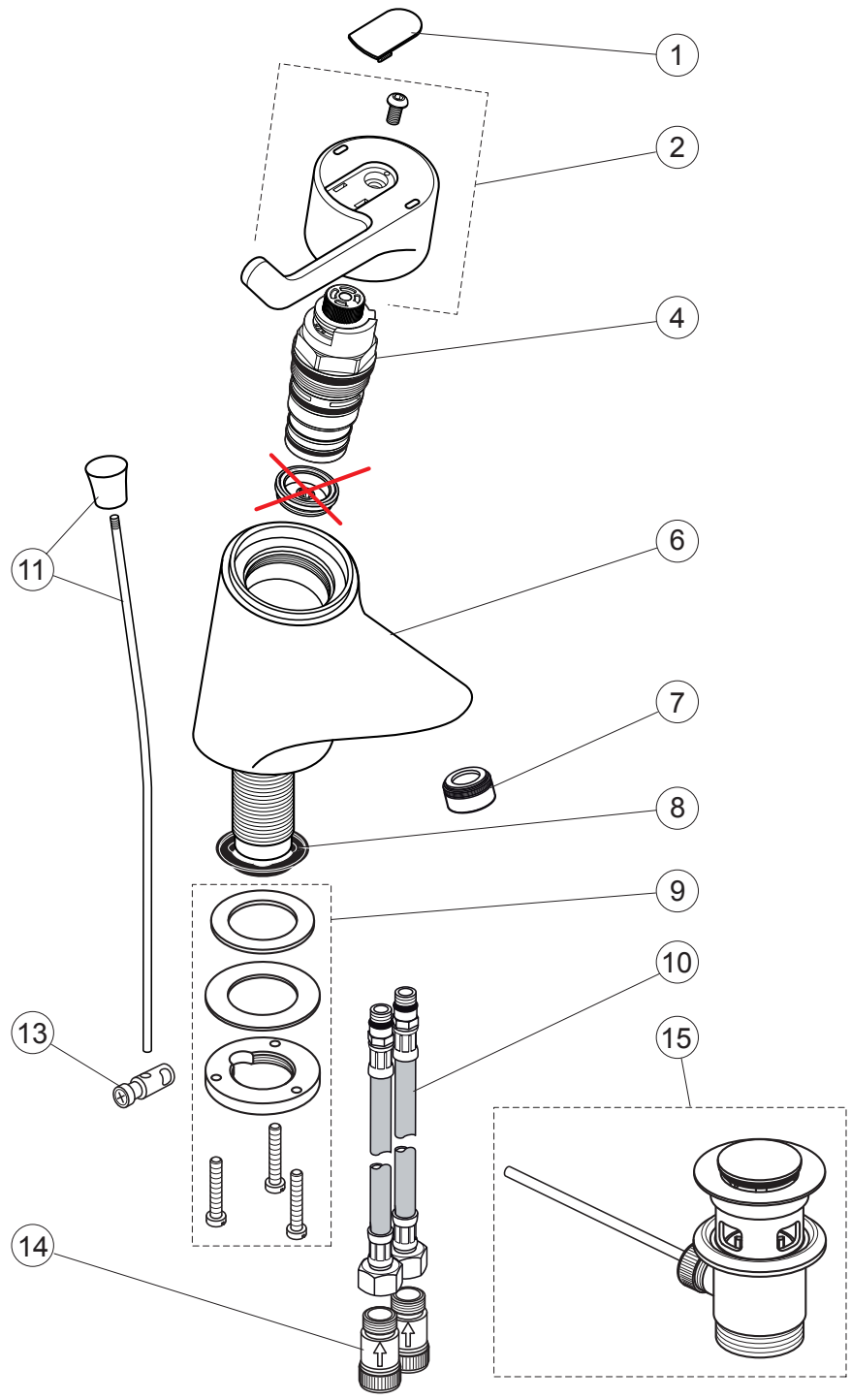

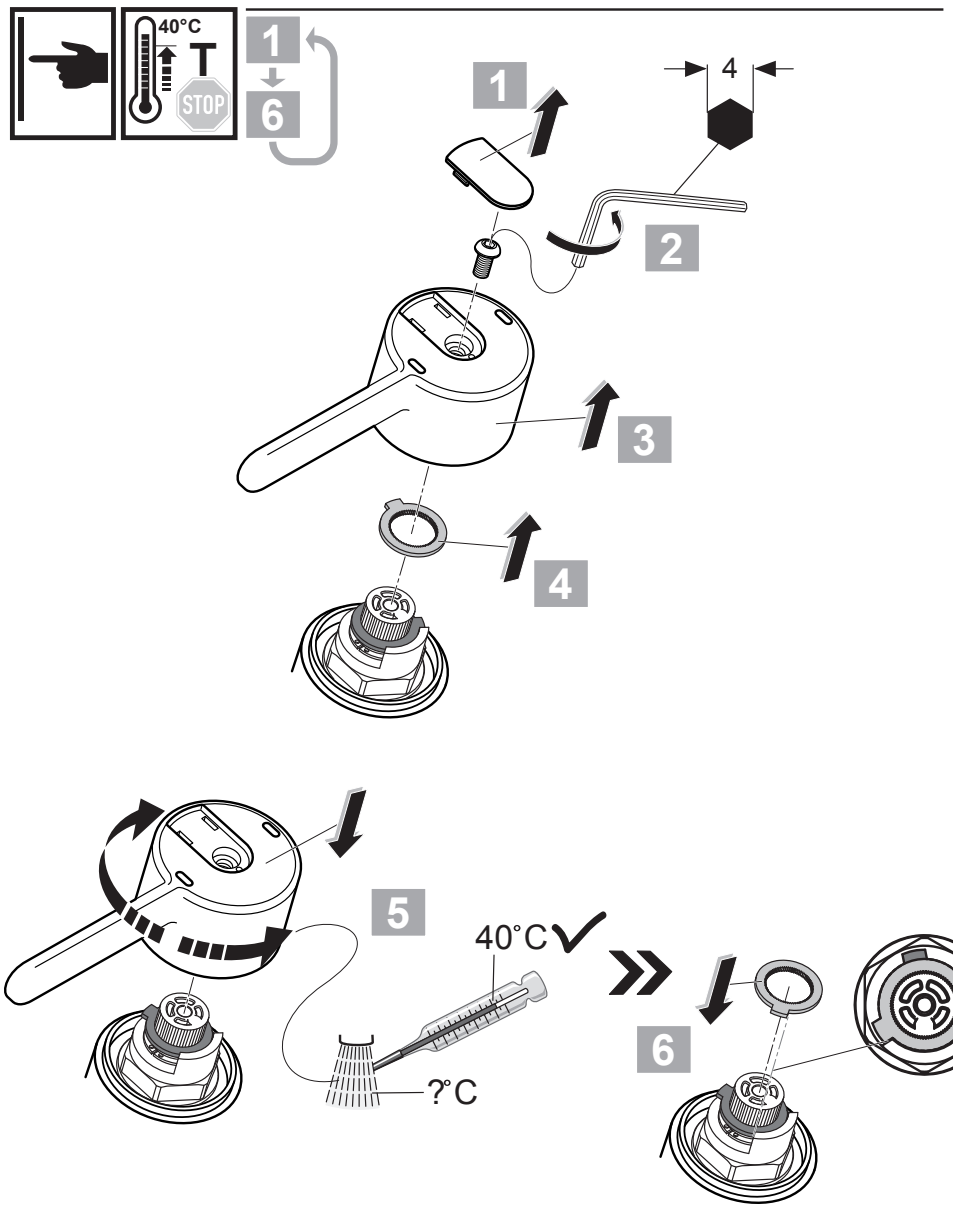

Ideal Standard

CERAPLUS

A 4091 .. A 4092 ..

1220 / A 865 721 40
Made in Germany

A 4091 ..

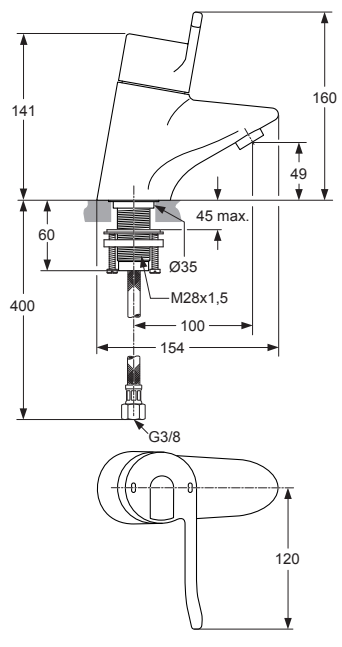

A 4092 ..

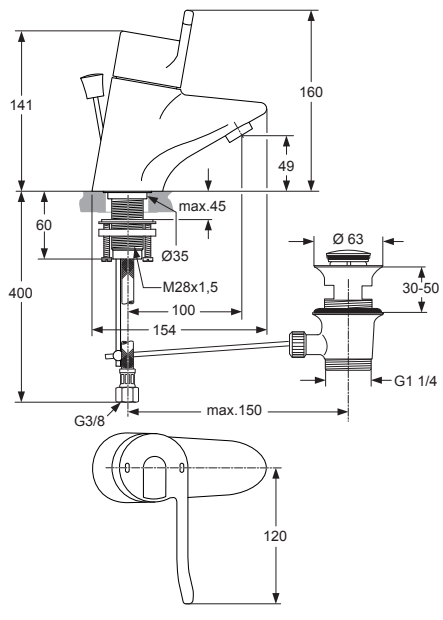

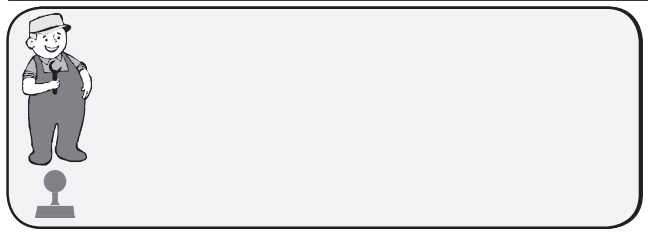

Ideal Standard International NV
Corporate Village - Gent Building
Da Vincilaan 2
1935 Zaventem
Belgium

www.idealstandardinternational.com

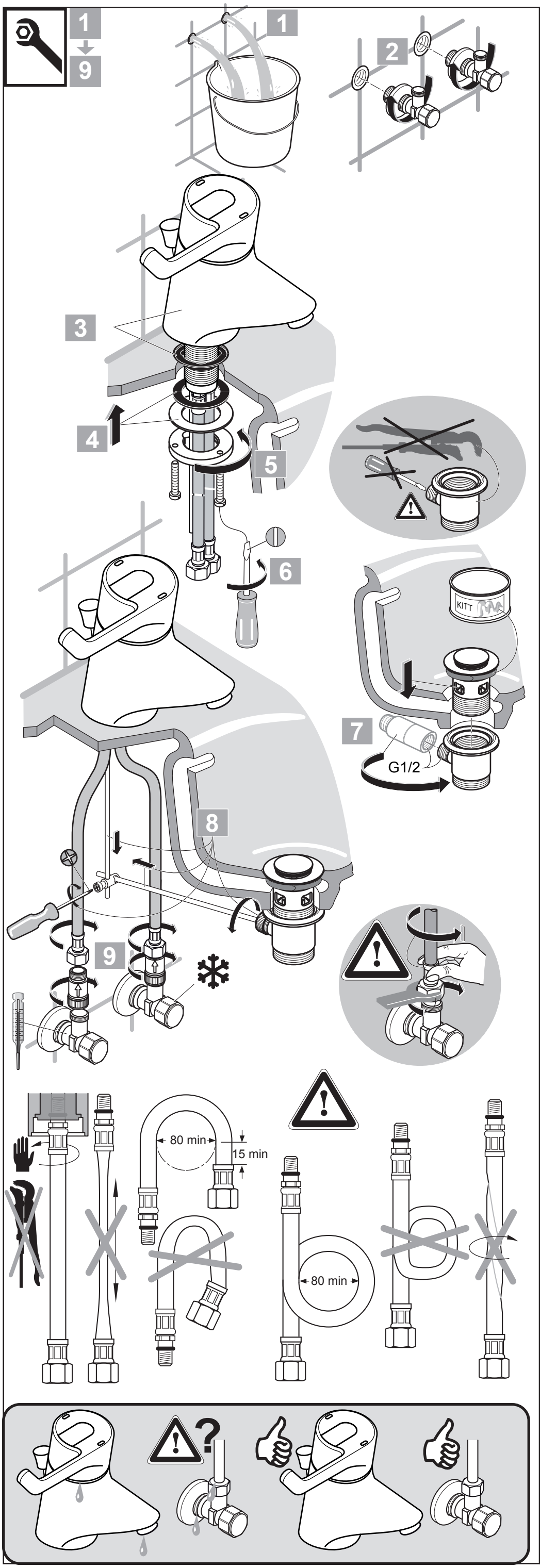
1
9
1
2
3
4
5
6
7
KITT
G1/2
8
9
80 min
15 min
80 min

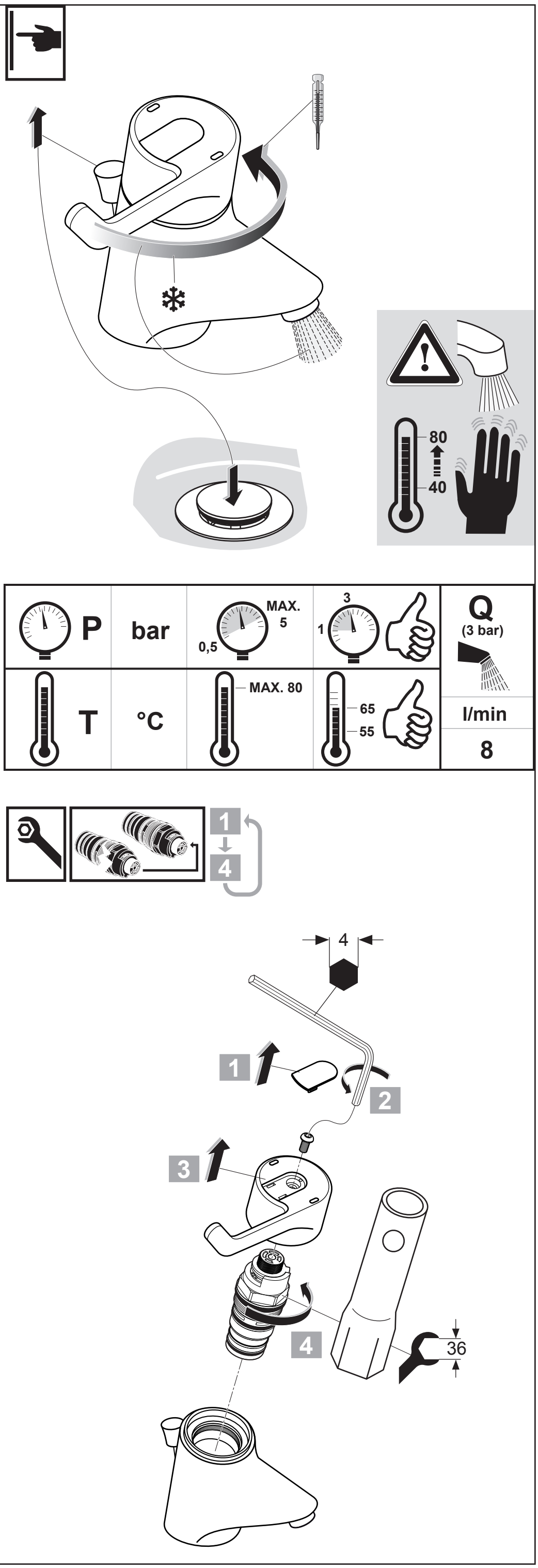
80
40
P
bar
MAX.
5
0,5
3
1
Q
(3 bar)
T
°C
MAX. 80
65
55
l/min
8
1
4
4
1
2
3
4
36