CL.1 Hooks - Chrome

83 251 980 Product version from 4/1/2025

- width 20mm
- height 60 mm
- 45mm projection

Chrome	83 251 980-00
Brushed Platinum	83 251 980-06
Platinum	83 251 980-08
Dark Chrome	83 251 980-19
Brushed Light Gold (PVD)	83 251 980-27
Brushed Durabrass (23kt Gold)	83 251 980-28
Matte Black	83 251 980-33
Brushed Champagne (22kt Gold)	83 251 980-46
Champagne (22kt Gold)	83 251 980-47
Brushed Dark Platinum	83 251 980-99

We reserve the right to change designs, product range and technical specifications without prior notice.
More information can be found at: www.dornbracht.com +49 (0) 2371 8899 900 mail@dornbracht.com

CL.1 Hooks - Chrome

83 251 980 Product version from 4/1/2025

mm [inches]

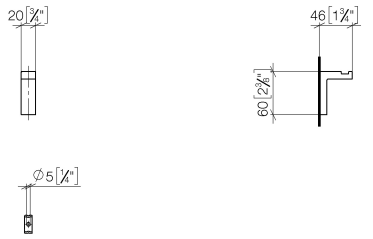

CL.1 Hooks - Chrome

83 251 980 Product version from 4/1/2025

Parts for other finishes can be found here: Brushed Platinum

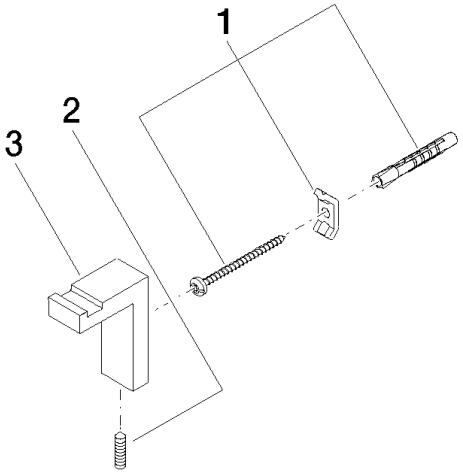

Spare parts list

No.	Item Number	Name	Quantity used	Delivery time
3	08 18 60 526-00	Hooks 20 x 45 x 60 mm - Chrome	1.00	20
2	04 31 11 114 00 90	Mounting Threaded pin M5 x 20 mm -	1.00	14
1	05 17 20 716 00 90	Attachment set 5 x 60 x 5 mm -	1.00	14

We reserve the right to change designs, product range and technical specifications without prior notice.
More information can be found at: www.dornbracht.com +49 (0) 2371 8899 900 mail@dornbracht.com