OUNEVA
OUNEVA GROUP

PRODUCT CARD

Product data

Product code	**VG03-0030**	STK-code	**1912397**	EAN-code	**6410019123975**
Product name	Busbar adapter OJL 200			ETIM class	**EC002270**
	-				

Technical data

	-	
	-	
	-	
	-	
	-	
	-	
Number of poles	**1**	pcs
	-	
	-	
	-	
	-	
	-	
Max. Operating temperature	**80**	°C
Weight	**22**	g
	-	
	-	
Color / Material	**Tin plated copper**	
Mounting / Connection	**Screw M6**	

CE RoHS

Description

OJL busbar adapters are used for connecting OJL connectors to copper or aluminium busbars.

Drawing

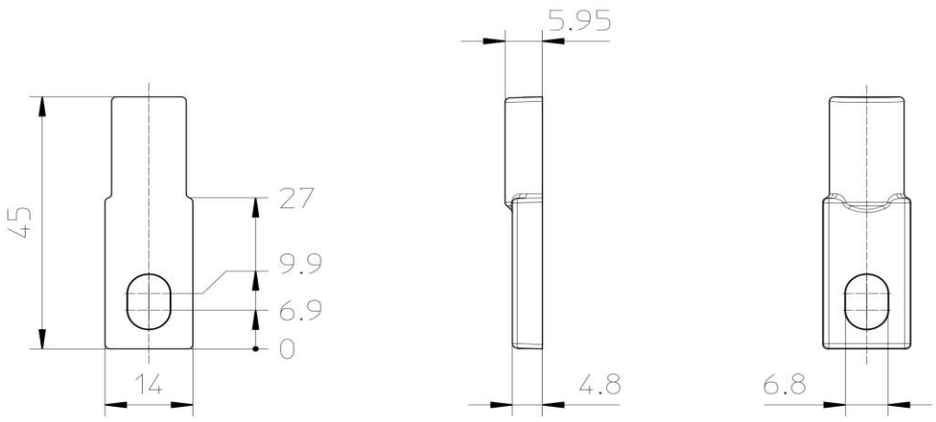

Package

Package	**Box**	Pcs / Package	**24**	Weight [kg]	**0,63**
Length [mm]	**120**	Width [mm]	**130**	Height [mm]	**100**

Ouneva Oy
Teollisuustie 21
FI-82730 Tuupovaara
Finland
Tel. +358 400 179 750
info@ouneva.fi
www.ounevagroup.fi
www.ounevaproducts.fi