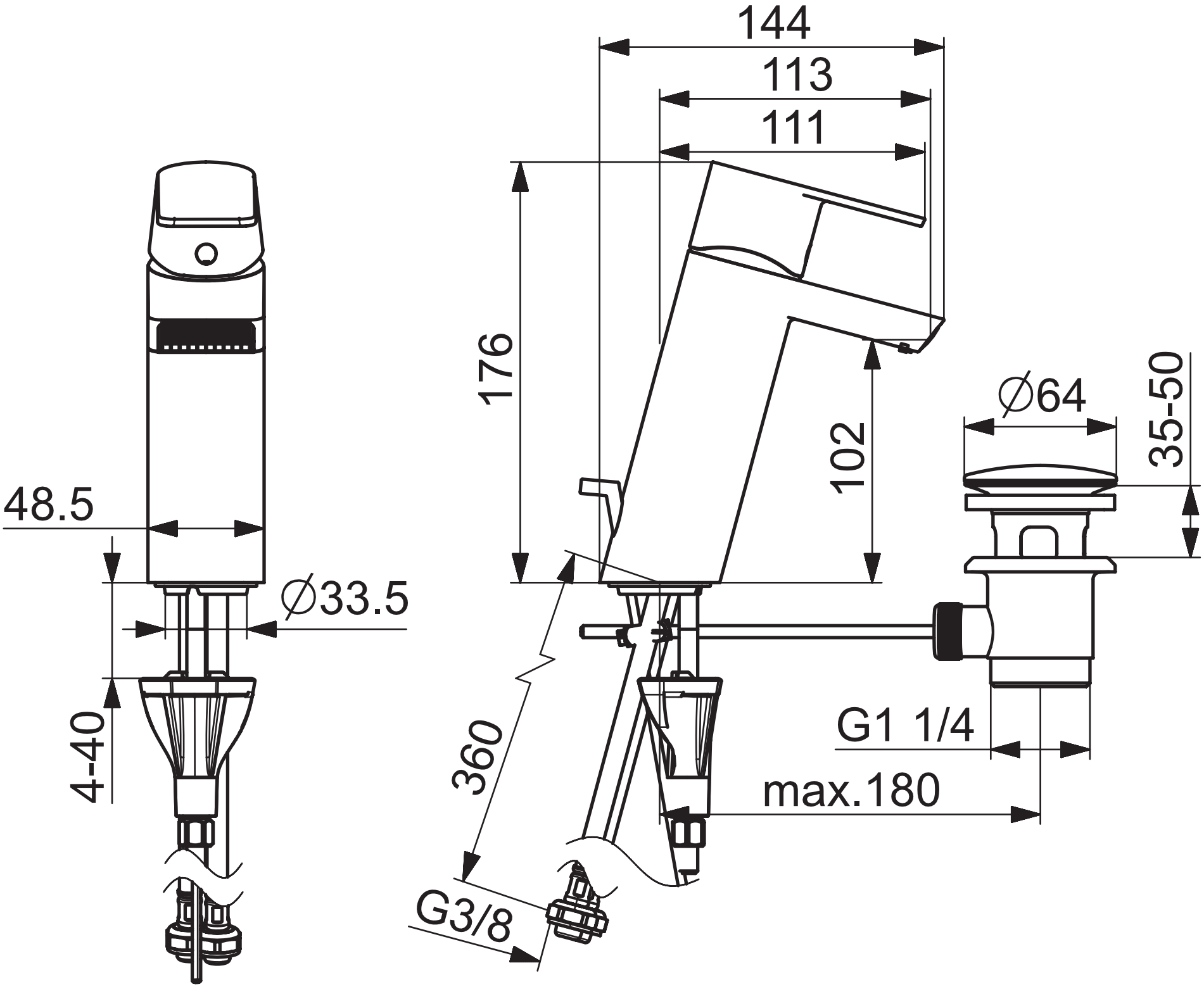
144
113
111
176
102
∅64
35-50
48.5
∅33.5
4-40
360
G1 1/4
max.180
G3/8