Technical data sheet

TP wall and ceiling bracket FS

Item number: 6363806



TP wall and ceiling bracket for universal use.
Important! If the wall and ceiling bracket is fixed directly to the wall or ceiling, then, for reasons of stability, always use the spacer, type DS 4.

St	Steel
FS	Strip galvanised

Master data

Item number	6363806
Type	TPD 145 FS
Description 1	Wall and ceiling bracket
Description 2	TP profile
Manufacturer	OBO
Dimension	B145mm
Colour	zinc
Material	Steel
Surface	Strip galvanised
Surface standard	DIN EN 10346
Smallest sales unit	1
Unit of quantity	Piece
Weight	48 kg
Weight unit	kg/100 pc.
CO2 Footprint (GWP) Cradle-to-Gate	1,2184 kg CO2e / 1 Piece

Technical data sheet

TP wall and ceiling bracket FS

Item number: 6363806

Dimensions

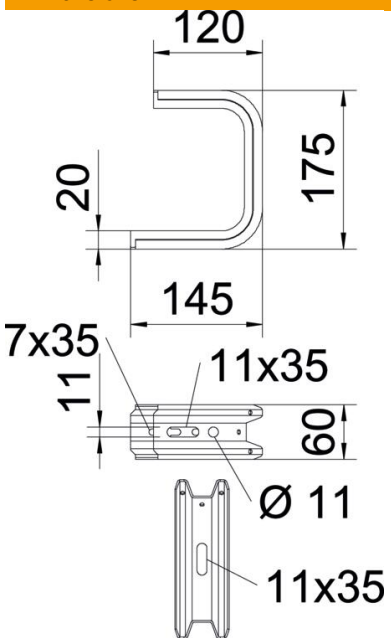

Length	145 mm
Width	145 mm
Height	60 mm
Dimension B	145 mm
Dimension H	175 mm

Technical data

Version for	Suspension bracket (C clamp)
F in kN ceiling	1.3 kN
F in kN wall	1.4 kN
Maintain electrical functions	no
for width max.	100 mm
for width min.	100
Suitable for mesh cable tray	yes
Suitable for cable ladder	yes
Suitable for cable tray	yes
Suitable for tray/ladder width	100 mm
ROHS-conformant	yes
Adjustable	no

Technical data sheet

TP wall and ceiling bracket FS

Item number: 6363806

Loads

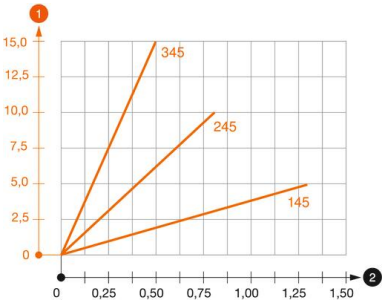

Load diagram, ceiling bracket TPD

1. Bending of the bracket tip at permitted bracket load
2. Permitted bracket load in kN without man load

—— Load curve with bracket lengths in mm

Characteristic anchor load values for TPD wall and ceiling bracket

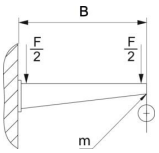

Wall fastening					
	Max. load [kN]				
	Bracket length [mm]				
Anchor type	145	245	345	445	545
BZ3 8x95/0-40	0.56	0.53	0.50	0.47	0.44
BZ3 10x90/0-30	1.03	0.96	0.68	0.54	

Max. total load F = cable weight + cable tray + ceiling bracket. The load capacity values increase considerably when used in uncracked concrete. The values given are based on concrete of strength class C20/25.