Technical data sheet

Screw-in spacer clip, heavy-duty version M6

Item number: 1385119

Can be screwed onto M6 thread. Size 27 FT is suitable for M25. Size 42.5 FT is suitable for M40. Size 48.5 FT is suitable for M50. Size 60 FT is suitable for M63.



CE UKCA

St	Steel
FT	Hot-dip galvanised

Master data

Item number	1385119
Type	2900WM6 48.5 FT
Description 1	Distance saddle
Description 2	with threaded connection M6
Manufacturer	OBO
Dimension	1 1/2"
Material	Steel
Surface	Hot-dip galvanised
Surface standard	DIN EN ISO 1461
Smallest sales unit	25
Unit of quantity	Piece
Weight	8.872 kg
Weight unit	kg/100 pc.
CO2 Footprint (GWP) Cradle-to-Gate	0,2043 kg CO2e / 1 Piece

Technical data sheet

Screw-in spacer clip, heavy-duty version M6

Item number: 1385119

Dimensions

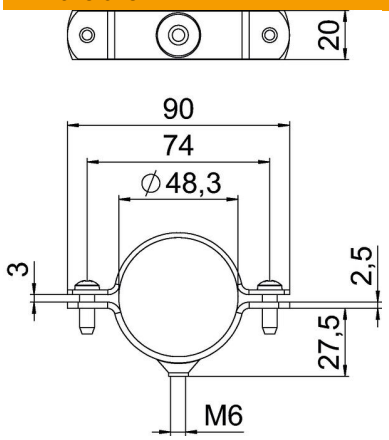

Length	88 mm
Width	20 mm
Dimension A	88 mm
Dimension B	72 mm
Dimension D	48.5 mm
Dimension d min.	48.5 mm
Dimension t	2.5 mm
Dimension t1 (mm)	2 mm
Dimension x	3 mm

Technical data

Version for	Closed
Fastening type	Screw hole
For diameter	48,5
for pipe diameter	M50
Suitable in fire protection area	no
Thread	M6
Size	1 1/2"
Halogen-free	no
Plastic-covered	no
Hole size	M6
Material thickness	2.5 mm
ROHS-conformant	yes
Bolt	M6 x 18
Clamping range D, max.	48.5 mm
Clamping range D, min.	45.5 mm
UV-resistant	yes