Walraven Bifix® G2 (M8/10) (BUP1000)

(B0504)

for insulated, steel and cast iron pipes

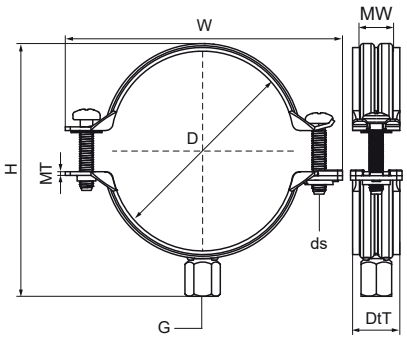

Features & benefits

- two-screw clamp
- with quick locking system
- perfect solution for pipe supports, also for outdoor installations
- material: steel
- product is part of the Walraven BIS UltraProtect® 1000 system
- suitable for in- and outdoor applications
- stands min. 1,000 hours salt spray test (max. 5% red rust) according to ISO 9227

Product Number	VVS Number	Outside Pipe Diameter	DN	Pipe Diameter Imperial	Connection Thread	Total Height	Total Width	Total Depth	Material Width	Material Thickness	Screw Size	Maximum Allowed Load Faz	Approvals
Reference Letter		*D*	*D*	*D*	*G*	*H*	*W*	*DtT*	*MW*	*MT*	*ds*	*Fa,z*	
Unit description		*mm*		*"*		*mm*	*mm*	*mm*	*mm*	*mm*		*N*	
3008014	18032214	10 - 14	DN 8	¼	M8/M10	36	52	22	20	1.25	M6	1,200	RAL-GZ 655/B, CE, ETA, EPD
3008019	18032219	15 - 19	DN 10	⅜	M8/M10	41	59	22	20	1.25	M6	1,200	RAL-GZ 655/B, CE, ETA, EPD
3008023	18032223	20 - 23	DN 15	½	M8/M10	45	63	22	20	1.25	M6	1,200	RAL-GZ 655/B, CE, ETA, EPD
3008028	18032228	25 - 28	DN 20	¾	M8/M10	50	68	22	20	1.25	M6	1,200	RAL-GZ 655/B, CE, ETA, EPD
3008035	18032235	31 - 35	DN 25	1	M8/M10	61	74	22	20	1.25	M6	1,200	RAL-GZ 655/B, CE, ETA, EPD
3008039	18032239	36 - 39	-	-	M8/M10	66	80	22	20	1.25	M6	1,200	RAL-GZ 655/B, CE, ETA, EPD
3008045	18032245	40 - 45	DN 32	1¼	M8/M10	70	84	22	20	1.25	M6	1,200	RAL-GZ 655/B, CE, ETA, EPD
3008052	18032252	48 - 52	DN 40	1½	M8/M10	76	91	22	20	1.25	M6	1,200	RAL-GZ 655/B, CE, ETA, EPD
3008058	18032258	54 - 58	-	-	M8/M10	83	97	22	20	1.25	M6	1,200	RAL-GZ 655/B, CE, ETA, EPD
3008064	18032264	60 - 64	DN 50	2	M8/M10	88	104	22	20	1.25	M6	1,200	RAL-GZ 655/B, CE, ETA, EPD
3008070	18032270	66 - 70	-	-	M8/M10	95	110	22	20	1.25	M6	1,200	RAL-GZ 655/B, CE, ETA, EPD
3008079	18032279	75 - 79	DN 65	2½	M8/M10	107	118	22	20	1.50	M6	1,300	RAL-GZ 655/B, CE, ETA, EPD
3008083	18032283	80 - 83	-	-	M8/M10	108	125	22	20	1.50	M6	1,300	RAL-GZ 655/B, CE, ETA, EPD
3008091	18032291	88 - 91	DN 80	3	M8/M10	123	134	26	23	2.00	M6	1,800	RAL-GZ 655/B, CE, ETA, EPD
3008105	18032305	100 - 105	-	-	M8/M10	135	148	26	23	2.00	M6	1,800	RAL-GZ 655/B, CE, ETA, EPD
3008115	18032315	108 - 115	DN 100	4	M8/M10	147	155	26	23	2.00	M6	1,800	RAL-GZ 655/B, CE, ETA, EPD
3008130	18032330	125 - 130	-	-	M8/M10	164	172	26	23	2.00	M6	1,800	RAL-GZ 655/B, CE, ETA, EPD
3008140	18032340	133 - 140	DN 125	5	M8/M10	171	181	26	23	2.00	M6	1,800	RAL-GZ 655/B, CE, ETA, EPD
3008160	18032360	152 - 160	-	-	M8/M10	190	201	26	23	2.00	M6	1,800	RAL-GZ 655/B, CE, ETA, EPD
3008169	18032369	165 - 169	DN 150	6	M8/M10	204	217	28	25	2.50	M8	3,600	RAL-GZ 655/B, CE, ETA, EPD
3008180	18032380	176 - 180	-	-	M8/M10	216	229	28	25	2.50	M8	3,600	RAL-GZ 655/B, CE, ETA, EPD

Walraven Bifix® G2 (M8/10) (BUP1000)

(B0504)

for insulated, steel and cast iron pipes

Product Number	VVS Number	Outside Pipe Diameter	DN	Pipe Diameter Imperial	Connection Thread	Total Height	Total Width	Total Depth	Material Width	Material Thickness	Screw Size	Maximum Allowed Load Faz	Approvals
Reference Letter		*D*	*D*	*D*	*G*	*H*	*W*	*DtT*	*MW*	*MT*	*ds*	*Fa,z*	
Unit description		*mm*		*"*		*mm*	*mm*	*mm*	*mm*	*mm*		*N*	
3008200	18032400	192 - 200	-	-	M8/M10	233	248	28	25	2.50	M8	3,600	RAL-GZ 655/B, CE, ETA, EPD
3008210	18032410	205 - 210	-	-	M8/M10	248	261	28	25	2.50	M8	3,600	RAL-GZ 655/B, CE, ETA, EPD
3008225	18032425	219 - 225	DN 200	8	M8/M10	260	275	28	25	2.50	M8	3,600	RAL-GZ 655/B, CE, ETA, EPD