Manual

06/25 MN050023

Safety digital input/output module
XS-322-8DIO-PF20

Powering Business Worldwide

Company information

All brand and product names are trademarks or registered trademarks of their respective owners.

Service

For service and support, please contact your local sales team.

Contact info.	Eaton.com/contact
Service page:	Eaton.com/aftersales

Original Operating Instructions

is the German-language edition of this document

Publication date

06/25 MN0500231th edition

Copyright

© 2025 Eaton Industries GmbH, 53105 Bonn

All rights, including those of translation, reserved.

No part of this manual may be reproduced, stored in a retrieval system, or transmitted in any form or by any means, whether electronic, mechanical, photocopying, micro-filming, recording, or otherwise, without the prior written permission of Eaton.

Subject to alteration.

DANGER!

Hazardous electrical voltage!

Before starting with the installation

- Installation requires qualified electrician
- Disconnect the power supply of the device.
- Secure against retriggering
- Verify isolation from the supply
- Ground and short-circuit
- Cover or enclose any neighboring live parts.
- Follow the engineering instructions (IL) of the device concerned.
- Only suitably qualified personnel in accordance with EN 50110-1/-2 (VDE 0105 part 100) may work on this device/system.
- Before installation and before touching the device ensure that you are free of electrostatic charge.
- The functional earth (FE) must be connected to the protective earth (PE) or to the equipotential bonding. The system installer is responsible for implementing this connection.
- Connecting cables and signal lines should be installed so that inductive or capacitive interference does not impair the automation functions.
- Install automation devices and related operating elements in such a way that they are well protected against unintentional operation.
- Suitable safety hardware and software measures should be implemented for the I/O interface so that a line or wire breakage on the signal side does not result in undefined states in the automation devices.
- Deviations of the mains voltage from the nominal value must not exceed the tolerance limits given in the specifications, otherwise this may result in malfunction and hazardous states.
- Emergency-Stop devices complying with IEC/EN 60204-1 must be effective in all operating modes of the automation devices. Unlatching the emergency switching off devices must not result in an automatic restart.
- Built-in devices for enclosures or cabinets must only be run and operated in an installed state; desktop devices and portable devices only when the housing is closed.
- Measures should be taken to ensure the proper restarting of programs interrupted after a voltage dip or outage. This should not result in dangerous operating states even for a short time. If necessary, emergency switching off devices should be implemented.
- Wherever faults in the automation system may cause damage to persons or property, external measures must be implemented to ensure a safe operating state in the event of a fault or malfunction (for example, by means of separate limit switches, mechanical interlocks, etc.).

Table of Contents

	Safety digital input/output moduleXS-322-8DIO-PF20	**1**
	Company information	2
	Before starting with the installation	3
	Table of Contents	5
0.1	About this manual	9
0.1.1	List of revisions	9
0.1.2	Target group/purpose of these Operating manuals	10
0.1.3	Legal disclaimer	11
0.1.4	Short designations	12
0.1.5	Writing conventions	13
0.1.5.1	Warning labels	13
0.1.5.2	Additional information for use	14
1.	**Description Safety digital input/output module XS-322-8DIO-PF20**	**15**
2.	**Basic safety instructions**	**16**
2.1	General safety instructions	16
2.2	Use as intended	17
2.3	Software	18
3.	**IT security**	**19**
4.	**Directives and standards**	**20**
4.1	Residual risks	20
4.2	Machine or system safety	20
4.3	Directives	20
4.3.1	Functional safety standards	20
4.3.2	EC Declaration of Conformity	21
5.	**Safety-relevant characteristics**	**22**
5.1	Horizontal mounting position, ambient temperature of 0–55 °C	22
5.2	Horizontal mounting position, ambient temperature of 55–60 °C	23
5.3	Compatibility	24

6. Nameplate **25**

7. Technical specifications **26**
7.1 Input specification 26
7.2 Specification of clock outputs for cross-circuit detection 27
7.3 Input circuit 28
7.4 Specifications for outputs 29
7.4.1 Maximum inductive and capacitive load 30
7.4.1.1 Maximum inductive load L (mH) at load current I (A) 30
7.4.1.2 Maximum capacitive load L (mH) at load current I (A) 31
7.5 Output circuit 32
7.6 Electrical requirements 32
7.7 Additional information 34
7.8 Ambient conditions 35

8. Mechanical dimensions **36**
8.1 Pin assignment 37
8.2 Status LEDs 38
8.3 Plug connectors that should be used 39
8.4 Labeling area 40

9. Wiring topic **41**
9.1 Connection example 41
9.2 Notes 41

10. Mounting/Installation **42**
10.1 Checking the included equipment 42
10.2 Mounting 42

11. Transport/storage **44**
11.1 Storage 44

12. Maintenance **45**
12.1 Maintenance 45
12.2 Repairs 45

13. Disposal **46**

Appendix **47**

A.1 Further usage information 48
A.2 Data sheets 49
Alphabetical index 51

0.1 About this manual

This operating manual contains all the information you will need in order to use the XN Safety modular safety PLC safely and correctly.

This Manual is considered an integral part of the XN Safety module and must always be readily available in the device's close proximity so that users have access to it. The XN Safety Designer programming software program is an integrated part of the XN Safety modular safety PLC system. This software is used to program the corresponding Safety projects.

This hardware manual describes all of Safety digital input/output modules lifecycle stages: transportation, installation, commissioning, operation, maintenance, storage, and disposal.
It assumes you have electrical engineering knowledge and skills.

Make sure to always use the latest documentation for your device.

Manual Safety digital input/output module MN050023EN

The latest version of this documentation, as well as additional references, is available for download on the Internet.

Eaton.com/documentation

Please send any comments, recommendations, or suggestions regarding this document to: DocumentationEGBonn@eaton.com

0.1.1 List of revisions

The following significant amendments have been introduced since previous issues:

Publication date	Page(s)	Keyword	New	Modification	Deleted
2025-01-31	ff	Issue for certification	✓		
2025-06-01	ff	Product launch edition	✓		

0.1 About this manual

0.1.2 Target group

This operating manual contains all the information you will need in order to operate the Safety modules.

This operating manual is intended for electricians and electrical engineers, as well as for the people who will be in charge of performing the electrical installation and people who will be using the Safety digital input/output module:

- Project planners, automation technicians, and automation engineers
- Installers, commissioning technicians
- Machine operators
- Maintenance personnel / testing technicians

This manual assumes that the reader has extensive knowledge of automation and the specifics behind it.

For additional help, information, and compatible accessories, please visit our website: Eaton.com.

If you have any questions, our Support Team will of course be happy to assist you. For our emergency phone number and office hours, please visit our website.

CAUTION

Installation requires qualified electrician

XN Safety module must be installed and connected exclusively by electricians and people who are familiar with electrical installation work.

Follow the safety instructions for the XN Safety module!

The section on safety instructions must be read and understood by everyone who will be working with the Safety digital input/output module before the actual work is performed Safety modules.

0.1.3 Legal disclaimer

All the information in this manual has been prepared to the best of our knowledge and in conformity with the state of the art. However, this does not exclude the possibility of there being errors or inaccuracies. Accordingly, this manual is subject to change without notice, with potential changes including technical changes intended to improve devices.
We hereby disclaim any and all liability for the correctness and completeness of this information. Please note that this operating manual purely provides a product description. In particular, the information in it does not guarantee any specific properties in terms of warranty laws and similar regulations.
The machine manufacturer will be responsible for proper installation and product configuration. Meanwhile, the machine operator will be responsible for the product's safe use and proper operation.

Do not use the XN Safety before reading and understanding this manual.

It is assumed that the user of this manual is thoroughly familiar with the information found in the manuals for incorporating the safety controller into automation processes.

Hazards posed by the safety PLC cannot be ruled out if the safety instructions are not observed – especially if the safety PLC is installed and commissioned by inadequately qualified personnel or if it is used improperly. Eaton hereby disclaims any and all liability for damages arising from failure to observe these instructions or comply with all applicable standards and regulations.

The use of sample programs and of the program part screenshots used in the documentation are subject to the following safety instructions and operating guidelines:

1. The program examples provided were created to the best of our knowledge and belief and in accordance with the current state-of-the-art. The program examples provided were created to the best of our knowledge and belief and in accordance with the current state-of-the-art. However, errors cannot be totally excluded, and the example programs do not cover all function blocks and applications that are available for the safety controller.
2. Electrical engineering skills and know-how are required in order to be able to program and commission the safety controller. An incorrectly wired or incorrectly configured safety controller will pose a property damage risk and an injury hazard when active components such as motors and pressure cylinders are being driven.
3. When using the provided sample programs and generating a program with XN Safety Designer Configuration tool, the user has the sole responsibility to observe the following:
   - All relevant rules and practices for preparing circuit diagrams for the safety controller as specified in the latest documents for these XN Safety.

- All occupational health and safety and accident prevention directives, standards, and regulations applicable to the commissioning, circuit diagram creation for, and use of the safety controller for your planned application, in particular those imposed by employers' liability insurance associations (Berufsgenossenschaften).
- Acknowledged rule of technology and state of science.
- All other general due diligence regarding the prevention of damages to life and physical condition of persons as well as material damage.

4. The manufacturer cannot accept any liability for any damages that are caused by customers not using the program examples provided in accordance with the conditions of use specified here under points 1 to 3.

→ The latest version of this manual can be found on our Download Center by using the following search term: MN050023EN.

Eaton.com/documentation

0.1.4 Short designations

The following general terms are used throughout this manual:

Short designation	Explanation
XN Safety	Entire series, used to refer to all the modules in the product family
Safety CPU	XN Safety CPU module XS-322-8DIO-PF20
XN Safety module	Safety digital input/output module XS-322-8DIO-PF20
XN Safety designer	XN Safety Designer Configuration tool

For the exact designation for your Safety digital input/output module, please refer to the inscription on the XS-322-8DIO-PF20.

0.1.5 Writing conventions

0.1.5.1 Warning labels

Risk of personal injury warning.

DANGER

"Danger" means that death or serious injury will occur if the specified measures are not taken.

- Follow all instructions in order to prevent death and serious injury.

WARNING

"Warning" means that death or serious injury may occur if the specified measures are not taken.

- Follow all instructions in order to prevent death and serious injury.

CAUTION

"Caution" means that moderate or minor injury may occur if the specified measures are not taken.

- Follow all instructions in order to prevent moderate to minor injury.

Property damage warning

ATTENTION

Warns about the possibility of material damage.

Prohibited use

Prohibited uses, actions, etc.

Prohibition signs interdict actions or
the use of certain objects

Requirements

Requirement

Mandatory signs require a certain behavior

Notes

Additional information, information worth knowing, useful additional information

Provides important information regarding the product, handling, use, or relevant parts of the documentation that require special attention.

▶ Indicates instructions to be followed

0.1.5.2 Additional information for use

Documents (such as manuals) are listed after the icon together with the corresponding name and Eaton number.

Publication title For identifying the Eaton publication code

Links to external Internet addresses are shown after the symbol.

Destination address without http(s)://www.

Links to external content are shown in blue.

1. Description Safety digital input/output module XS-322-8DIO-PF20

The Safety digital input/output module XS-322-8DIO-PF20 is characterized by safety integrity level SIL3 (EN IEC 62061) and performance level e (PL e) (EN ISO 13849).

The Safety digital input/output module features:

- 2 safe outputs +24 V with a maximum of 2 A per output (EN 61131-2; EN IEC 62061 und EN ISO 13849)
- 6 safe inputs +24 V DC/0.5 ms (EN 61131-2; EN IEC 62061 and EN ISO 13849)
- Double clock output (short-circuit proof)

The safe outputs are used for the safety-related output of two sensor signals, for example to control relays or valves.

The safe inputs are used for the safety-related reading of six sensor signals (emergency stop, enabling switch, etc.).

XS-322-8DIO-PF20

In order to be able to test inputs and detect cross faults (e.g. EMERGENCY stop), the Safety digital input/output module has two non-safety-related clock outputs TA and TB.

The Safety digital input/output module for safety-related applications is suitable for use in systems with optional modules and interface tags as set forth in XN Safety system manual, → Section "Further usage information", page 48

In order to be used in an application, Safety digital input/output module requires at least one XN Safety CPU module XS-102-C00-000, which regulates time-correct communication with the safety modules via secure bus telegrams. This also includes

- Processing the safety application

And

- Distributing the configuration data to remote safety modules

Equipment supplied

1x XS-322-8DIO-PF20

One (5) PLUG-FMC-4S (1.5/4-ST-3.5) plug connector

2. Basic safety instructions

2.1 General safety instructions

Follow the safety instructions in all of this manual's sections without fail. These instructions will be highlighted visually with appropriate symbols.

Pursuant to EU Directives, this operating manual is an integral part of a product. Accordingly, make sure to always keep this manual in the machine's vicinity, as it contains important instructions.
If you sell, transfer, or rent out the product, make sure to pass this documentation on and point out that it is available online.

In regard to all occupational health and safety requirements associated with the machine's use, the manufacturer must conduct a risk assessment in accordance with Machinery Directive 2006/42/EC before a machine is placed on the market.

Operate the XN Safety module product exclusively with devices and accessories approved by Eaton for this purpose.

CAUTION

Handle the XN Safety module carefully and do not drop it.
Do not, under any circumstance, let any foreign objects or liquids get into the module.
Do not open the XN Safety module!
If the XN Safety module is not working as intended or if it sustains any damage that could result in a hazard being posed, replace it without fail!
The XN Safety module conforms to EN 61131-2.
When used in combination with a system, the system integrator must meet the requirements in standard EN 60204-1.
Make sure to observe all environmental conditions for your own safety and the safety of others.

2.2 Use as intended

The safety functions implemented with the Safety digital input/output module are intended for use in safety applications within the context of a PLC and meet all necessary requirements for safe operation in conformity with SIL 3 as defined in EN IEC 62061 and PL e / Cat. 4 as defined in EN ISO 13849-1.

CAUTION

Always observe the instructions and information in this operation manual. Properly transporting and storing the device are essential for proper operation.

The device must be installed, mounted, programmed, commissioned, operated, maintained, and removed from service exclusively by trained qualified personnel.

Within this context, "trained qualified personnel" refers to individuals who have received the required vocational training as skilled workers or who have been trained by a skilled worker and accordingly are authorized to operate and take care of safety devices and systems in compliance with all applicable safety (functional safety) guidelines, standards, and Directives.

For your safety and the safety of others, make sure to only use the Safety digital input/output module as intended.

This intended use also includes installing the device properly in terms of EMC.

Within this context, the following are instances of unintended use:

- Any alterations of any type made to the device, as well as the use of damaged devices.
- Using the device outside of the technical limits and scope described in this operating manual or outside of the specified technical data.

2.3 Software

The XN Safety Designer Configuration tool is used to program the Safety project. The application compiled from this project can then be transferred to the XN Safety CPU module.
For basic information regarding functional safety, please refer to the XN Safety system manual.

3. IT security

XN Safety modules have been developed for integration into networks that are secure against third-party access.

The network being used could be exposed to the following risks, for example:

- Unauthorized access
- Data tampering
- And many other IT security risks

The integrator, or the company operating the device, is responsible for conducting a risk assessment for the connections between XN Safety and the corresponding integration into the general infrastructure. This assessment can result in a variety of measures, including, but not limited to (if necessary):

- IT/OT network segmentation (VLANs or physical)
- Firewalls
- Password-protected user accounts
- Data encryption
- and much more.

When it comes to functional safety, the various functions and their integrity are completely invulnerable to direct manipulation in this regard, since these functions cannot be affected through communication-based interfaces.

However, the availability of the overall system (as is the case with all safety functions) can be negatively affected as a result of third-party attacks, which is why the aforementioned measures are required.

4. Directives and standards

4.1 Residual risks

CAUTION

The following residual risks for the Safety digital input/output module must be taken into account in the risk assessment conducted by the system integrator:

- Release of environmentally harmful substances, emissions, and unusual temperatures
- Dangerous touch voltages
- Effects of operational electric, magnetic, and electromagnetic fields
- Possible effects of IT devices

4.2 Machine or system safety

Observe all accident prevention and occupational health and safety standards and regulations that apply at the location of use.

4.3 Directives

The Safety digital input/output module has been designed in compliance with all applicable European Union Directives and tested for conformity accordingly.

4.3.1 Functional safety standards

EN IEC 62061	Safety of machinery - Functional safety of safety-related control systems
EN ISO 13849-1	Safety of machinery - Safety-related parts of control systems - Part 1: General principles for design
EN ISO 13849-2	Safety of machinery - Safety-related parts of control systems - Part 2: Validation

4.3.2 EC Declaration of Conformity

EU Declaration of Conformity
The Safety digital input/output moduleXS-322-8DIO-PF20 conforms to all applicable European standards for programmable logic controllers and complies with the following European Directives:

- **2006/42/EG** directive 2006/42/EG of the European Parliament and Council of 17 May 2006 on machinery, and amending Directive 95/16/EC (Machinery Safety Directive)
- **2014/30/EU** electromagnetic compatibility (EMC Directive)
- **2011/65/EU** Restriction of the use of certain hazardous substances in electrical and electronic equipment (RoHS Directive)

EU Declarations of Conformity are available on the EATON homepage. In addition, this one is included as a resource in the data sheet for the XS-322-8DIO-PF20.

5. Safety-relevant characteristics

5.1 Horizontal mounting position, ambient temperature of 0–55 °C

Module inputs	Safety characteristic values	Safety level
XS-322-8DIO-PF20 including XN Safety CPU module XS-102-C00-000	**Single-channel use:**	
	PFH = 2.20E-09 (1/h) SFF = 99 % $MTTF_D$ = 1552 years DC = 97 %	SIL 3 as per EN IEC 62061 PL d[1)]/Cat. 2 as per EN ISO 13849
	Dual-channel use:	
	PFH = 7.70E-10 (1/h) SFF = 99 % $MTTF_D$ = 1753 years DC = 97 %	SIL 3 as per EN IEC 62061 PL e/Cat. 4 as per EN ISO 13849

Module outputs	Safety characteristic values	Safety level
XS-322-8DIO-PF20 including XN Safety CPU module XS-102-C00-000	PFH = 2.40E-09 (1/h) SFF = 99 % $MTTF_D$ = 1346 years DC = 98 %	SIL 3 as per EN IEC 62061 PL e / Cat. 4 as per EN ISO 13849

5.2 Horizontal mounting position, ambient temperature of 55–60 °C

Module inputs	Safety characteristic values	Safety level
XS-322-8DIO-PF20 including XN Safety CPU module XS-102-C00-000	**Single-channel use:**	
	PFH = 2.60E-09 (1/h) SFF = 99 % $MTTF_D$ = 1300 years DC = 97 %	SIL 3 as per EN IEC 62061 PL d[1)]/Cat. 2 as per EN ISO 13849
	Dual-channel use:	
	PFH = 9.50E-09 (1/h) SFF = 99 % $MTTF_D$ = 1475 years DC = 97 %	SIL 3 as per EN IEC 62061 PL e/Cat. 4 as per EN ISO 13849

Module outputs	Safety characteristic values	Safety level
XS-322-8DIO-PF20 including XN Safety CPU module XS-102-C00-000	PFH = 2.70E-09 (1/h) SFF = 99 % $MTTF_D$ = 1140 years DC = 99 %	SIL 3 as per EN IEC 62061 PL e / Cat. 4 as per EN ISO 13849

[1)] DC is in the "high" range according to Table 5 and the associated EN ISO 13849 note. In combination with the high $MTTF_D$ value and the good PFH value, this results in the performance level PLd according to Table K.1.

Justification for SIL 3 for single-channel use:
Due to the high SFF value of greater than or equal to 99 %, SIL 3 can be assumed according to EN IEC 62061 with a hardware fault tolerance (HFT) of 0.

5.3 Compatibility

Compatibility
For more information on the compatibility of the XN Safety modules, please refer to the "Compatibility of XN Safety modules" section in the XN Safety system manual.

Test pulses for cross-circuit detection
The XN Safety module sends pulses at regular intervals to detect a short circuit between the outputs. When selecting sensors, make sure that these pulses do not cause a sensor to switch or trigger any other diagnostic message. The pulses cannot be switched off or configured.

CAUTION
Cross-circuit detection
It is essential to note that the cross-circuit detection only functions correctly in terms of safety if it has been correctly wired and configured.
It should also be noted that cross-circuit detection only works between neighboring inputs. Cross-circuits between non-adjacent inputs must be prevented by design measures (e.g. separate cable routing, insulated cables) by the machine installer.

6. Nameplate

The nameplate can be found on the Safety digital input/output module.

7. Technical specifications

7.1 Input specification

The inputs are type 1 in accordance with EN 61131-2.

Qty.	6	
Input rated voltage	+24 V DC	
Input voltage range	Minimum +18 V	maximum +30 V[1)]
Signal level	low: ≤ +5 V	high: ≥ +15 V
Switching threshold	Normally +11 V	
Input current	3 mA at +24 V	
Input delay	0.5 ms	

[1)] If there is an elevated ambient temperature > 55 °C, the maximum permissible input voltage decreases from +30 V to +28.8 V.

7.2 Specification of clock outputs for cross-circuit detection

Qty.	3x pulse A	3x pulse B
Output rated voltage	+24 V DC	
Output voltage range	Minimum +18 V	maximum +30 V [2)]
Output current	100 mA at +24 V	
Additional information	Short-circuit proof	

[2)] If there is an elevated ambient temperature > 55 °C, the maximum permissible input voltage decreases from +30 V to +28.8 V.
The clock outputs clock A and clock B are generated once internally in the module and routed in parallel to the connectors. Therefore, a direct cross-connection of clock A and/or clock B of a connector leads to a cross-connection identification for all channels.
With long cable lengths, when using the digital inputs with the clock outputs for cross-circuit detection, it must be ensured that the cable capacitance from the clock output to the digital input does not exceed a value of 100 nF and the cable resistance does not exceed a value of 250 Ω, so that the cross-circuit detection does not detect a fault in the wiring if the wiring is correct.

7.3 Input circuit

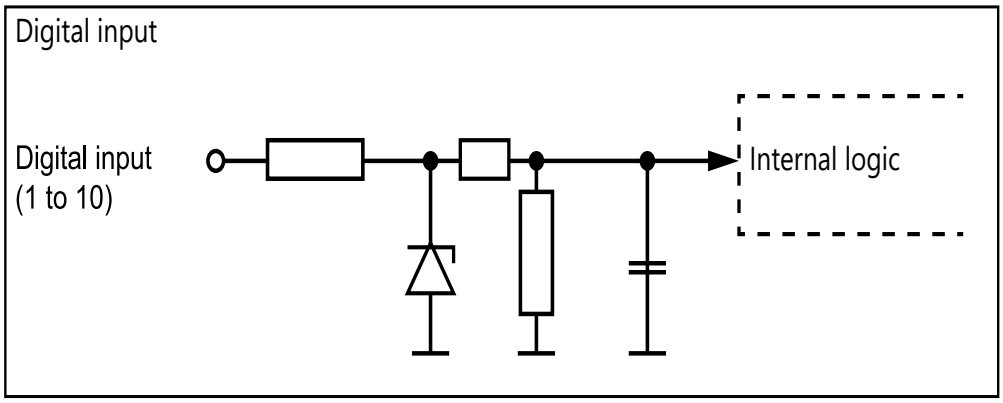

7.4 Specifications for outputs

All safety-related outputs are short-circuit-proof and specified in accordance with EN 61131-2. The outputs are compatible with type 1, 2 and 3 inputs.

Qty.	2	
Output rated voltage	+24 V DC	
Output voltage range	Minimum +18 V	Up to +30 V
Maximum output current	2 A	
Maximum total current per output group (2 outputs)	4 A up to max. 55 °C ambient temperature	
Braking voltage when switching off inductive loads	Normally 0.85 V	
Maximum breaking energy of outputs (inductive load)	maximum 0.4 Joule per channel	
Switching-on delay	< 200 µs	
Switch-off delay	< 1 ms	
Additional information	Short-circuit proof	
Switch-off test pulse width (t_1)	minimum 0.1 ms	maximum 1.5 ms
Switch-off test pulse interval between FET test and HSS test (t_2)	minimum 112 ms	maximum 6450 ms
Switch-off test pulse interval (t_3)	60 s	

Timing switch-off test pulses

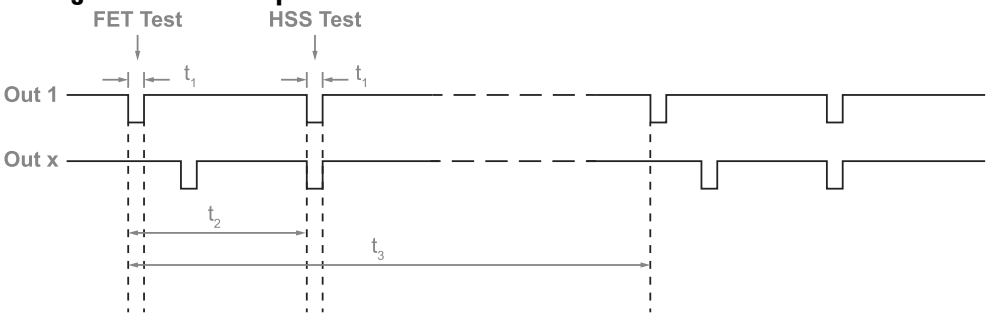

The supply voltage must have an upstream fuse with appropriate voltage and current limiting characteristics!

7.4.1 Maximum inductive and capacitive load

7.4.1.1 Maximum inductive load L (mH) at load current I (A)

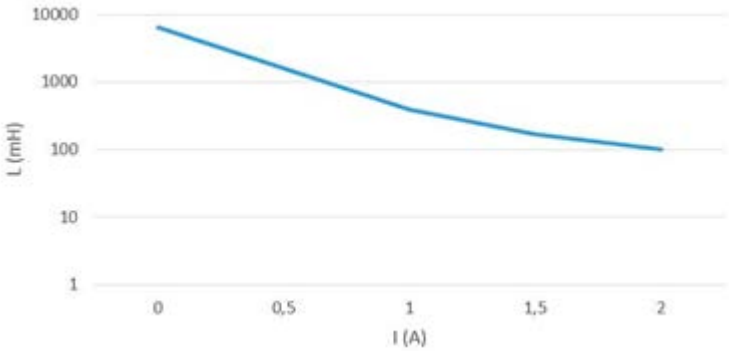

7.4.1.2 Maximum capacitive load L (mH) at load current I (A)

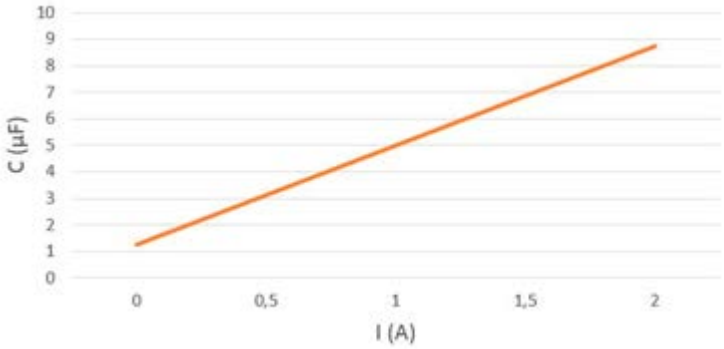

I (A)	L (mH)	C (µF)
0	6400	1.25
0.5	1600	3.13
1	400	5
2	100	8.75

7.5 Output circuit

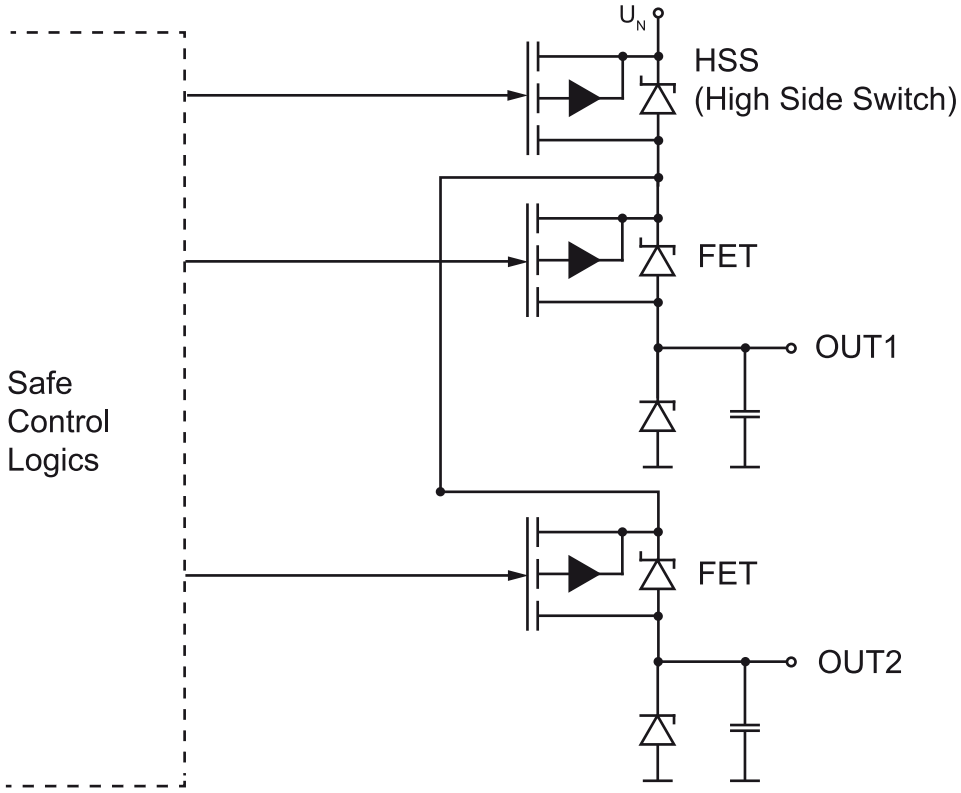

The diagram shows the internal output circuit of the XS-322-8DIO-PF20.

7.6 Electrical requirements

Voltage supply from safety bus	+12 V	
Current consumption on the safety bus (+12 V supply)	-	Maximum 34 mA
Supply from XN Safety bus	+24 V	
Current consumption on XN Safety bus (+24 V supply)	-	Maximum 21 mA

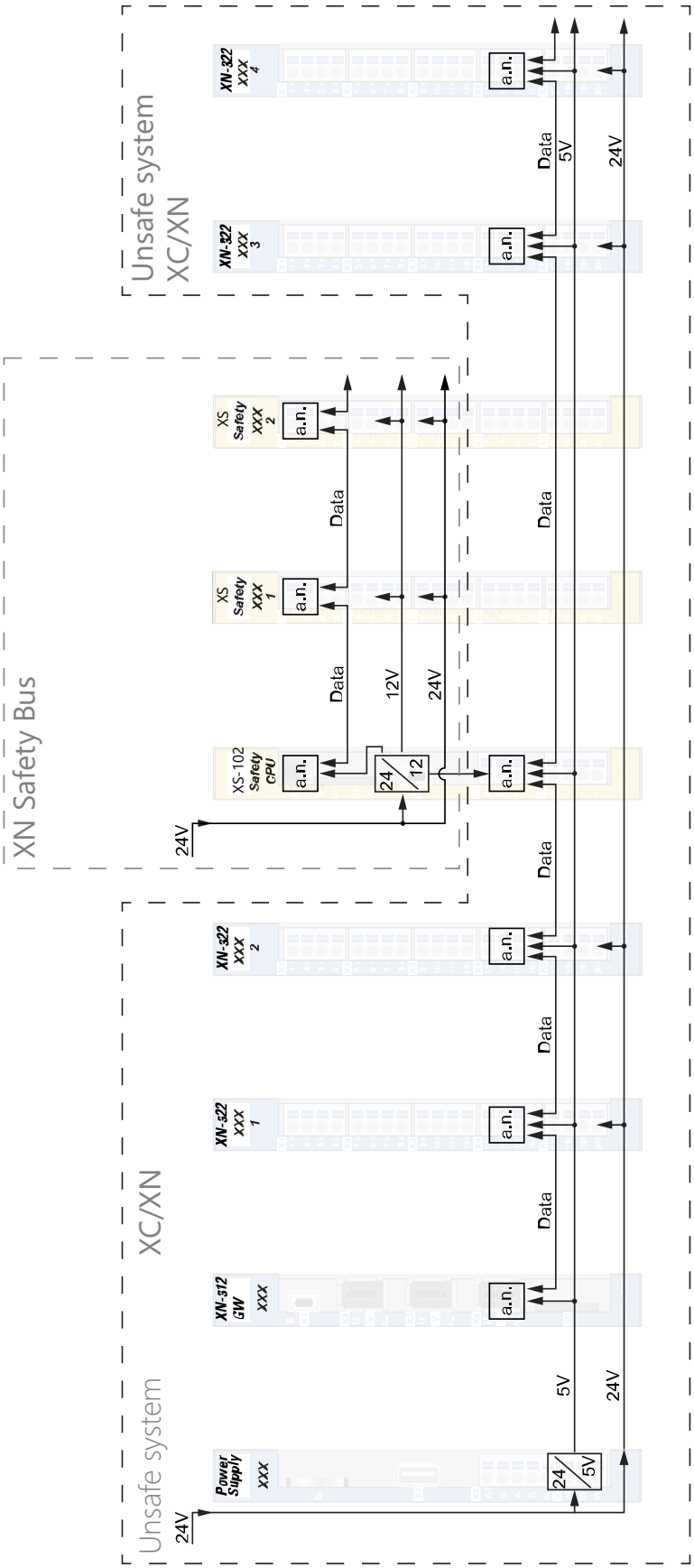

Wiring XN Safety System in the unsafe system XC/XN

-Each module is an active module. (active node)
-Safety CPU is connected to the XN Safety Bus (including +5V supply)
-The Safety Bus is independent and separate from the XC/XN unsafe system.

7.7 Additional information

Article number	EP-401355
Circuit card coating	no
Standardization	Designed according to UL508 (E247993)
Approvals	cULus, CE, TÜV-Austria EC type-tested
Lifetime	20 years
Time of reaction	Please refer to the "Response time and shutdown time" section in the XN Safety system manual

7.8 Ambient conditions

Storage temperature	-20 – + 85 °C (-4 – +185 °F)	
Ambient temperature	± 0 – +55 °C (+32 – +131 °F) [UL] ± 0 – +60 °C (+32 – +140 °F) [CE]	
Humidity	0 - 95%, non-condensing	
Installation altitude	max. 2000 m above sea level without derating > 2000 m to max. 5000 m with derating of the maximum ambient temperature by 0.5 °C per 100 m	
Operating conditions	Pollution Degree 2	
Noise emissions	≤ 70 dB	
EMC interference immunity	EN 61000-6-2 (industrial environments) EN 61000-6-7 (interference immunity for functional safety in industrial applications) (stricter requirements in conformity with EN IEC 62061)	
EMC emitted interference	EN 61000-6-4 (industrial environment)	
Vibration resistance	EN 60068-2-6	3.5 mm of 5-8.4 Hz 1 g of 8.4-150 Hz
Mechanical shock resistance	EN 60068-2-27	15 g (147.15 m/s²)
Protection Style	EN 60529/NEMA 250	IP20/type1

8. Mechanical dimensions

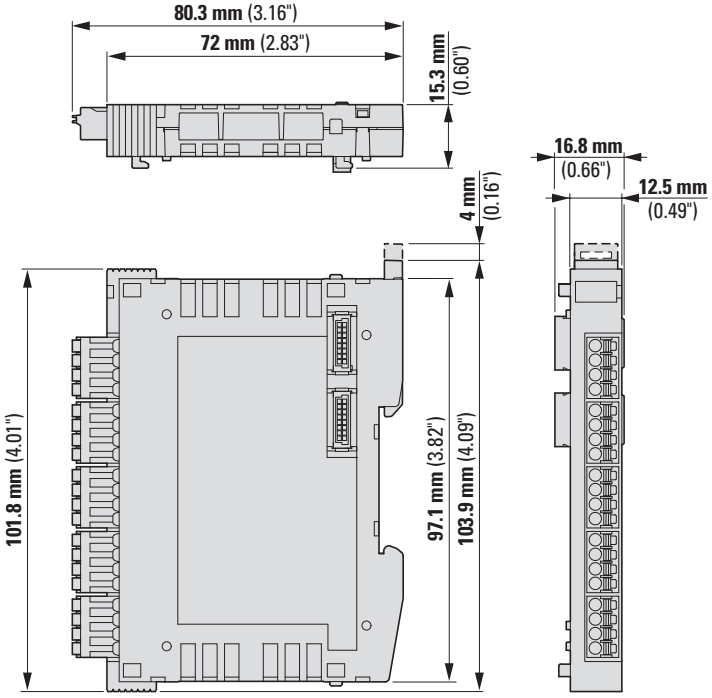

Dimensions (W x H x D)	16.8 mm x 104.2 mm x 80.3 mm (0.661" x 4.102" x 3.161") +/- 0.2 mm
Weight	63 gr

8.1 Pin assignment

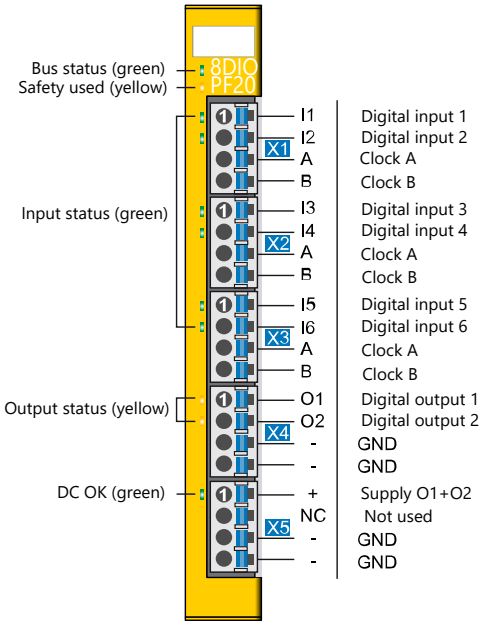

The GND supply connections (X5: pin 3 and pin 4) are internally connected. This means that only one GND pin (pin 3 or pin 4) needs to be connected to supply the module.

The bridged pins of the GND supply may also be used for further looping. However, it is necessary to make sure that this does not result in a total current of 6 A being exceeded per terminal!

8.2 Status LEDs

Bus status	Green	ON	Bus communication OK
		OFF	No power supply available
		FLASHES (5 Hz)	No communications
Safety-Used	Yellow	ON	Module is used and no error
		OFF	Module is not used or not in operational mode
Input status	Green	ON	Input ON
		OFF	Input OFF
Output status	Yellow	ON	Output ON
		OFF	Output OFF
DC OK	Green	ON	Output group is supplied

8.3 Plug connectors that should be used

X1-X5: Connector with push-in spring-cage terminal (included in the scope of supply)

The spring-cage terminals can be used to connect ultrasonically spliced (ultrasonically welded) wires.

Connection specifications :

Stripping length / ferrule length	10 mm
Angle of plug	Parallel to conductor axis or circuit card
Conductor cross-section, rigid	0.2-1.5 mm²
Conductor cross-section, flexible	0.2-1.5 mm²
Conductor cross-section, ultrasonically spliced wires	0.2-1.5 mm²
Conductor cross section, AWG/kcmil	24-16
Conductor cross-section, flexible with ferrule (uninsulated)	0.2-1.5 mm²
Conductor cross-section, flexible with ferrule (insulated)	0.25-0.75 mm² (reduction reason: d2 of ferrule)

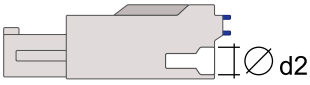

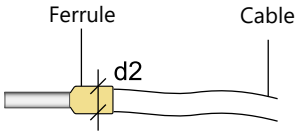

d2 = max. 2.8 mm

8.4 Labeling area

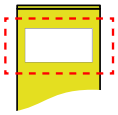

Manufacturer	Weidmüller
Type	MF 10/5 CABUR MC NE WS
Article number Weidmüller	1854510000
Compatible printers	Weidmüller
Type	Printjet Advanced 230V
Article number Weidmüller	1324380000

9. Wiring topic

9.1 Connection example

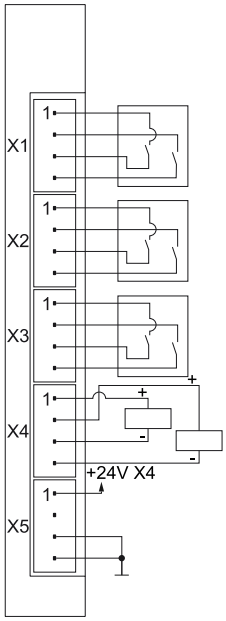

9.2 Notes

The input filters that suppress noise pulses make it possible to use the device in harsh environmental conditions. In addition, it is recommended to exercise particular care during wiring in order to ensure proper operation.

Observe the following installation instructions:

- Do not route the input cables parallel to load circuits.
- Suppressor circuit for all contactor coils (RC suppressors or flyback diodes)
- Correct grounding

If possible, connect the earth bus to the control panel earth bus!
De-energize the system before carrying out any wiring or installation work!
Do NOT, under any circumstance, connect or disconnect the XN Safety module while energized!

10. Mounting/Installation

10.1 Checking the included equipment

Make sure to check the included equipment to make sure everything is included and in perfect condition,
→ Section "Equipment supplied", page 15.

Check the XN Safety module for damage both when first receiving it and before using it for the first time. If the Safety digital input/output module is damaged, please contact our Customer Service Team and do not install the XN Safety module in your system.
Damaged components can disrupt or damage your system!

10.2 Mounting

XN Safety modulees are intended for installation in control cabinets. An EN/IEC 60715 DIN-rail is required in order to mount the modules. The DIN-rail must establish a conductive connection to the control panel's back plate. The individual XN Safety modulees need to be mounted side by side on the DIN-rail and then secured in place by closing the locking elements. The grounding tab at the back of the XN Safety modulees is used to establishing the functional earth connection between the module and the DIN-rail.

The device must always, without exception, be installed in a horizontal mounting position (module designation on top) with sufficient clearance between the XN Safety module block's vents and surrounding components / the control cabinet wall. This is necessary in order to achieve optimal cooling and air circulation so that the device's proper functionality will be guaranteed all the way up to the maximum operating temperature.

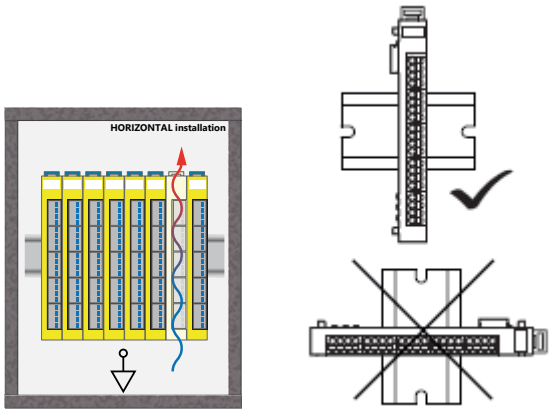

Fig. 1: Installation position - horizontal installation

Recommended minimum clearances between XN Safety modulees and surrounding components / the control cabinet wall:

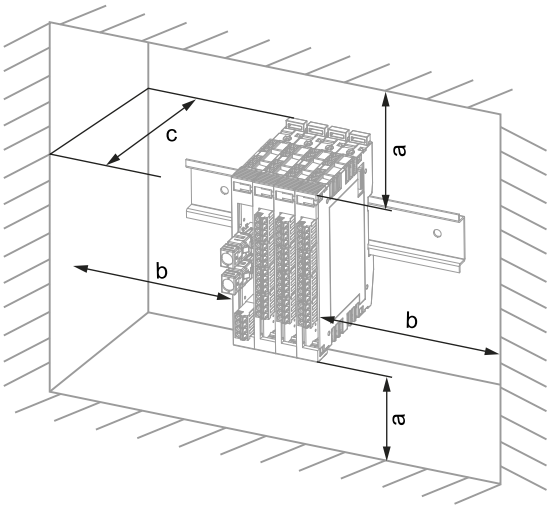

a	b	c
30 mm (1.18″)	**30 mm** (1.18″)	**100 mm** (3.94″)

Clearances in mm (inch)
a, b ≧ 30 mm (1.18"), c ≧ 100 mm (3.94")
Operating temperature
ϑ: 0°C (32°F) ≦ T ≦ 55°C (131°F) [UL] or ± 0 – +60 °C (+32 – +140 °F) [CE]

11. Transport/storage

This XN Safety module contains sensitive electronics. This means that you should make sure that it is not subjected to any large mechanical loads during transportation and storage.
The humidity, shock, and vibration conditions that apply during operation apply to storage and transportation as well!
Temperature and humidity fluctuations may occur during transportation. Accordingly, make sure that no moisture condenses inside the XN Safety module by turning off the XN Safety module and letting it acclimate to room temperature first.
If possible, ship / transport the XN Safety module in its original packaging. Otherwise, select packaging that will adequately protect the XN Safety module from external mechanical factors (a cardboard box filled with air pillows, for instance).

11.1 Storage

If you are not using the XN Safety module, store it in conformity with the corresponding storage conditions. For more information, please refer to → Section "Transport/storage", page 44.
Make sure that when the XN Safety module is stored, all protective caps (if any) are in place so that the device will not become soiled and foreign objects and liquids will be unable to get into it.

12. Maintenance

Follow all safety instructions during servicing and maintenance → Section "Basic safety instructions", page 16.

12.1 Maintenance

The XN Safety module has been specifically designed for low-maintenance operation.

12.2 Repairs

If the XN Safety module is defective or needs repairs, please send it to Eaton together with a detailed description of the problem. Shipping conditions, → Chapter "12 Transport/storage", page 44.

13. Disposal

If you want to dispose of the XN Safety module, make sure to comply with all applicable national disposal regulations without fail.
Do not dispose of the XN Safety module with household waste.

Appendix

A.1 Further usage information 48
A.2 Data sheets 49

A.1 Further usage information

Hardware

For more information and information on additional XN Safety module, please refer to the following documentation:

XN Safety system manual	MN050020
Installation instructions XS-102-C00-000, XS-322-...	IL050036ZU
Operation manualXN Safety CPU module XS-102-C00-000	MN050019
Operation manualXN Safety module XS-322-10DI-PF	MN050021
Operation manualXN Safety module XS-322-8DO-P20	MN050022
Operation manualXN Safety module XS-322-8DIO-PF20	MN050023
Operation manualXN Safety module XS-322-2INC	MN050024
Operation manualXN Safety module XS-322-4AI-I2	MN050025
Operation manualXN Safety module XS-322-2DO-RNOAC	MN050026
Operation manualXN Safety module XS-322-2DO-RNODC	MN050027

Software

For information on XN Safety designer, open the XN Safety Designer Configuration tool software and then the user help (MN050028).

Download Center, Eaton Online Catalog

Enter "xnsafety" into the search box and the catalog will take you directly to the corresponding product group in the Automation, Control and visualization section.

Eaton.com/documentation

Eaton.com/ecat

Product information

For up-to-date information, please consult the product page on the Internet.

Eaton.com/xnsafety

A.2 Data sheets

For the latest information on available XN Safety modules, please refer to the data sheet for the module in the Eaton online catalog.

Eaton.com/ecat

XN Safety CPU module

EP-401352 XS-102-C00-000	Safety CPU module, SIL3/PLe, Cat. 4

XS-Safety modules as expansions

with relay outputs	
EP-401359 XS-322-2DO-RNODC	Safety Digital, 30 VDC 2 outputs, relay ,NO, 6 A
EP-401360 XS-322-2DO-RNOAC	Safety Digital, 230 VAC 2 outputs, relay, NO, 6 A

With digital inputs	
EP-401353 XS-322-10DI-PF	Safety Digital, 10 inputs, 24 VDC, 0.5ms

with digital output	
EP-401354 XS-322-8DO-P20	Safety Digital, 8 outputs, 24 VDC, 2 A

With digital inputs/outputs	
EP-401355 XS-322-8DIO-PF20	Safety Digital, 6 inputs / 2 outputs, 24 VDC, 0.5 ms, 2 A

Rotary encoder	
EP-401357 XS-322-2INC	Safety rotary encoder, 2 inputs, incremental, 12-bit

with analog inputs	
EP-401356 XS-322-4AI-I2	Safety Analog current input, 4 inputs, 4-20 mA, 16-bit

Accessory devices

Cat No. and type	Description
191080 XC-303-C32-002	XC modular PLC XC303, Small PLC, CODESYS 3 programmable, SD Slot, USB, 3x Ethernet, 2x CAN, RS485, four digital inputs/outputs
191081 XC-303-C32-001	XC modular PLC XC303, Small PLC, CODESYS 3 programmable, SD Slot, USB, 2x Ethernet, CAN, RS485
191082 XC-303-C32-000	XC modular PLC XC303, Small PLC, CODESYS 3 programmable, SD Slot, Ethernet, CAN
199973 XC-204-C10-000	Modular PLC XC204, Micro PLC, programmable CODESYS 3, USB, Ethernet
199975 XC-204-C21-001	Modular PLC XC204, Micro PLC, programmable CODESYS 3, USB, 2x Ethernet, CAN, 2DIO
199977 XC-204-C20-002	Modular PLC XC204, Micro PLC, programmable CODESYS 3, USB, 2x Ethernet, RS485, 2DIO
199971 XC-104-C10-000	Modular PLC XC104, Micro PLC, programmable CODESYS 3, USB, Ethernet
178782 XN-312-GW-CAN	XN-312 gateway to bus system CANopen
178785 XN-312-GW-EC	XN-322 digital input module, 20 digital inputs with 24 VDC each, pulse-switching, 5.0 ms
191087 MEMORY-SDU-A1	microSD card
206903 TS-CI-K3	DIN-rail that fit to 4RU
206904 TS-CI-K4	DIN-rail that fit to 6RU

Alphabetical index

A

After Sales Service 2
Ambient conditions 35

B

Brand names
    Product names 2

C

Clock output specification 27
Company information 2
Compatibility 24
Copy-protected 2
Copyright 2

D

Description 15
Directives 20
Download Center 48

E

ecat 48

F

Further reading 48

I

Input specification 26
Intended use 17
IT security 19

L

Labeling area 40

M

Manuals 48

O

Online Catalog 48
Original Operating Instructions 2

P

Pin assignment 37
Plug connectors 39

R

Residual risks 20

S

Safety-relevant characteristics 22
Software 18
Standards 20

Eaton is an intelligent power management company dedicated
to improving the quality of life and protecting the environment for people everywhere. We are guided by our commitment to do business right, to operate sustainably and
to help our customers manage power – today and well into the future.
By capitalizing on the global growth trends of electrification and digitalization, we're accelerating the planet's transition to renewable energy, helping to solve the world's most urgent power management challenges, and doing what's best for our stakeholders and all of society.

For more information, visit eaton.com.

Eaton Industries GmbH
Hein-Moeller-Str. 7–11
D-53115 Bonn

© 2025 Eaton Corporation
All rights reserved
06/2025 MN050023EN

Powering Business Worldwide