Manual

06/25 MN050026

Safety relay output module
XS-322-2DO-RNOAC

Powering Business Worldwide

Company information

All brand and product names are trademarks or registered trademarks of their respective owners.

Service

For service and support, please contact your local sales team.

Contact info.	Eaton.com/contact
Service page:	Eaton.com/aftersales

Original Operating Instructions

is the German-language edition of this document

Publication date

06/25 MN0500261th edition

Copyright

© 2025 Eaton Industries GmbH, 53105 Bonn

All rights, including those of translation, reserved.

No part of this manual may be reproduced, stored in a retrieval system, or transmitted in any form or by any means, whether electronic, mechanical, photocopying, micro-filming, recording, or otherwise, without the prior written permission of Eaton.

Subject to alteration.

DANGER!

Hazardous electrical voltage!

Before starting with the installation

- Installation requires qualified electrician
- Disconnect the power supply of the device.
- Secure against retriggering
- Verify isolation from the supply
- Ground and short-circuit
- Cover or enclose any neighboring live parts.
- Follow the engineering instructions (IL) of the device concerned.
- Only suitably qualified personnel in accordance with EN 50110-1/-2 (VDE 0105 part 100) may work on this device/system.
- Before installation and before touching the device ensure that you are free of electrostatic charge.
- The functional earth (FE) must be connected to the protective earth (PE) or to the equipotential bonding. The system installer is responsible for implementing this connection.
- Connecting cables and signal lines should be installed so that inductive or capacitive interference does not impair the automation functions.
- Install automation devices and related operating elements in such a way that they are well protected against unintentional operation.
- Suitable safety hardware and software measures should be implemented for the I/O interface so that a line or wire breakage on the signal side does not result in undefined states in the automation devices.
- Deviations of the mains voltage from the nominal value must not exceed the tolerance limits given in the specifications, otherwise this may result in malfunction and hazardous states.
- Emergency-Stop devices complying with IEC/EN 60204-1 must be effective in all operating modes of the automation devices. Unlatching the emergency switching off devices must not result in an automatic restart.
- Built-in devices for enclosures or cabinets must only be run and operated in an installed state; desktop devices and portable devices only when the housing is closed.
- Measures should be taken to ensure the proper restarting of programs interrupted after a voltage dip or outage. This should not result in dangerous operating states even for a short time. If necessary, emergency switching off devices should be implemented.
- Wherever faults in the automation system may cause damage to persons or property, external measures must be implemented to ensure a safe operating state in the event of a fault or malfunction (for example, by means of separate limit switches, mechanical interlocks, etc.).

Table of Contents

	Safety relay output moduleXS-322-2DO-RNOAC	**1**
	Company information	2
	Before starting with the installation	3
	Table of Contents	5
0.1	About this manual	9
0.1.1	List of revisions	9
0.1.2	Target group	10
0.1.3	Legal disclaimer	11
0.1.4	Short designations	12
0.1.5	Writing conventions	13
0.1.5.1	Warning labels	13
0.1.5.2	Additional information for use	14
1.	**Description Safety relay output module XS-322-2DO-RNOAC**	**15**
2.	**Basic safety instructions**	**16**
2.1	General safety instructions	16
2.2	Use as intended	17
2.3	Software	18
3.	**IT security**	**19**
4.	**Directives and standards**	**20**
4.1	Residual risks	20
4.2	Machine or system safety	20
4.3	Directives	20
4.3.1	Functional safety standards	20
4.3.2	EC Declaration of Conformity	21
5.	**Safety-relevant characteristics**	**22**
5.1	Horizontal mounting position, ambient temperature of 0–55 °C	22
5.2	Horizontal mounting position, ambient temperature of 55–60 °C	22
5.3	Compatibility	23
6.	**Nameplate**	**24**

7. Technical specifications **25**
7.1 Specification relay outputs 25
7.2 Operating time of the relay output module depending on the number of switching cycles per year 27
7.3 Relay connection 28
7.4 Electrical requirements 28
7.5 Additional information 30
7.6 Ambient conditions 31

8. Mechanical dimensions **32**
8.1 Pin assignment 33
8.2 Status LEDs 33
8.3 Plug connectors that should be used 34
8.4 Labeling area 35

9. Wiring topic **36**
9.1 Connection example 36
9.2 Notes 36

10. Mounting/Installation **37**
10.1 Checking the included equipment 37
10.2 Mounting 37

11. Supported cycle times **39**
11.1 Cycle times shorter than 1 ms (in µs) 39
11.2 Cycle times greater than or equal to 1 ms (in ms) 39

12. Transport/storage **40**
12.1 Storage 40

13. Maintenance **41**
13.1 Maintenance 41
13.2 Repairs 41

14. Disposal **42**

Appendix **43**
A.1 Further usage information 44
A.2 Data sheets 45

Alphabetical index 47

0.1 About this manual

This operating manual contains all the information you will need in order to use the XN Safety modular safety PLC safely and correctly.

This Manual is considered an integral part of the XN Safety module and must always be readily available in the device's close proximity so that users have access to it. The XN Safety Designer programming software program is an integrated part of the XN Safety modular safety PLC system. This software is used to program the corresponding Safety projects.

This hardware manual describes all of Safety relay output modules lifecycle stages: transportation, installation, commissioning, operation, maintenance, storage, and disposal.
It assumes you have electrical engineering knowledge and skills.

Make sure to always use the latest documentation for your device.

Manual Safety relay output module MN050027EN

The latest version of this documentation, as well as additional references, is available for download on the Internet.

Eaton.com/documentation

Please send any comments, recommendations, or suggestions regarding this document to: DocumentationEGBonn@eaton.com

0.1.1 List of revisions

The following significant amendments have been introduced since previous issues:

Publication date	Page(s)	Keyword	New	Modification	Deleted
2025-01-31	ff	Issue for certification	✓		
2025-06-01	ff	Product launch edition	✓		

0.1 About this manual

0.1.2 Target group

This operating manual contains all the information you will need in order to operate the Safety modules.

This operating manual is intended for electricians and electrical engineers, as well as for the people who will be in charge of performing the electrical installation and people who will be using the Safety relay output module:

- Project planners, automation technicians, and automation engineers
- Installers, commissioning technicians
- Machine operators
- Maintenance personnel / testing technicians

This manual assumes that the reader has extensive knowledge of automation and the specifics behind it.

For additional help, information, and compatible accessories, please visit our website: Eaton.com.

If you have any questions, our Support Team will of course be happy to assist you. For our emergency phone number and office hours, please visit our website.

CAUTION

Installation requires qualified electrician

XN Safety module must be installed and connected exclusively by electricians and people who are familiar with electrical installation work.

Follow the safety instructions for the XN Safety module!

The section on safety instructions must be read and understood by everyone who will be working with the Safety relay output module before the actual work is performed Safety modules.

0.1.3 Legal disclaimer

All the information in this manual has been prepared to the best of our knowledge and in conformity with the state of the art. However, this does not exclude the possibility of there being errors or inaccuracies. Accordingly, this manual is subject to change without notice, with potential changes including technical changes intended to improve devices.
We hereby disclaim any and all liability for the correctness and completeness of this information. Please note that this operating manual purely provides a product description. In particular, the information in it does not guarantee any specific properties in terms of warranty laws and similar regulations.
The machine manufacturer will be responsible for proper installation and product configuration. Meanwhile, the machine operator will be responsible for the product's safe use and proper operation.

Do not use the XN Safety before reading and understanding this manual.

It is assumed that the user of this manual is thoroughly familiar with the information found in the manuals for incorporating the safety controller into automation processes.

Hazards posed by the safety PLC cannot be ruled out if the safety instructions are not observed – especially if the safety PLC is installed and commissioned by inadequately qualified personnel or if it is used improperly. Eaton hereby disclaims any and all liability for damages arising from failure to observe these instructions or comply with all applicable standards and regulations.

The use of sample programs and of the program part screenshots used in the documentation are subject to the following safety instructions and operating guidelines:

1. The program examples provided were created to the best of our knowledge and belief and in accordance with the current state-of-the-art. The program examples provided were created to the best of our knowledge and belief and in accordance with the current state-of-the-art. However, errors cannot be totally excluded, and the example programs do not cover all function blocks and applications that are available for the safety controller.
2. Electrical engineering skills and know-how are required in order to be able to program and commission the safety controller. An incorrectly wired or incorrectly configured safety controller will pose a property damage risk and an injury hazard when active components such as motors and pressure cylinders are being driven.
3. When using the provided sample programs and generating a program with XN Safety Designer Configuration tool, the user has the sole responsibility to observe the following:
   - All relevant rules and practices for preparing circuit diagrams for the safety controller as specified in the latest documents for these XN Safety.

- All occupational health and safety and accident prevention directives, standards, and regulations applicable to the commissioning, circuit diagram creation for, and use of the safety controller for your planned application, in particular those imposed by employers' liability insurance associations (Berufsgenossenschaften).
- Acknowledged rule of technology and state of science.
- All other general due diligence regarding the prevention of damages to life and physical condition of persons as well as material damage.

4. The manufacturer cannot accept any liability for any damages that are caused by customers not using the program examples provided in accordance with the conditions of use specified here under points 1 to 3.

→ The latest version of this manual can be found on our Download Center by using the following search term: MN050027.

Eaton.com/documentation

0.1.4 Short designations

The following general terms are used throughout this manual:

Short designation	Explanation
XN Safety	Entire series, used to refer to all the modules in the product family
Safety CPU	XN Safety CPU module
XN Safety module	Safety relay output module XS-322-2DO-RNOAC
XN Safety designer	XN Safety Designer Configuration tool

For the exact designation for your Safety relay output module, please refer to the inscription on the device.

0.1.5 Writing conventions

0.1.5.1 Warning labels

Risk of personal injury warning.

DANGER

"Danger" means that death or serious injury will occur if the specified measures are not taken.

- Follow all instructions in order to prevent death and serious injury.

WARNING

"Warning" means that death or serious injury may occur if the specified measures are not taken.

- Follow all instructions in order to prevent death and serious injury.

CAUTION

"Caution" means that moderate or minor injury may occur if the specified measures are not taken.

- Follow all instructions in order to prevent moderate to minor injury.

Property damage warning

ATTENTION

Warns about the possibility of material damage.

Prohibited use

Prohibited uses, actions, etc.

Prohibition signs interdict actions or
the use of certain objects

Requirements

Requirement

Mandatory signs require a certain behavior

Notes

Additional information, information worth knowing, useful additional information

Provides important information regarding the product, handling, use, or relevant parts of the documentation that require special attention.

▶ Indicates instructions to be followed

0.1.5.2 Additional information for use

Documents (such as manuals) are listed after the icon together with the corresponding name and Eaton number.

Publication title For identifying the Eaton publication code

Links to external Internet addresses are shown after the symbol.

Destination address without http(s)://www.

Links to external content are shown in blue.

1. Description Safety relay output module XS-322-2DO-RNOAC

The Safety relay output module XS-322-2DO-RNOAC is characterized by safety integrity level SIL3 (EN IEC 62061) and performance level e (PL e) (EN ISO 13849).

The Safety relay output module features:

- 2 safe outputs (EN 61131-2; EN IEC 62061 and EN ISO 13849)

The two outputs are used for safety-related closing (NO) of a circuit at a permissible rated voltage of +24 V DC/230 AC and a maximum continuous current of 6 A.

The Safety relay output module is used for switching higher power ratings or potential-separated circuits, such as hydraulic valves or the transfer of emergency stop circuits.

XS-322-2DO-RNOAC

The Safety relay output module for safety-related applications is suitable for use in systems with optional modules and interface tags as set forth in XN Safety system manual, → Section "Further usage information", page 44

In order to be used in an application, Safety relay output module requires at least one XN Safety CPU module XS-102-C00-000, which regulates time-correct communication with the safety modules via secure bus telegrams. This also includes

- Processing the safety application

And

- Distributing the configuration data to remote safety modules

Equipment supplied

1x XS-322-2DO-RNOAC

2x plug connector PLUG-FKC-4L (2.5/4-ST-5.08)

2. Basic safety instructions

2.1 General safety instructions

Follow the safety instructions in all of this manual's sections without fail. These instructions will be highlighted visually with appropriate symbols.

Pursuant to EU Directives, this operating manual is an integral part of a product. Accordingly, make sure to always keep this manual in the machine's vicinity, as it contains important instructions.
If you sell, transfer, or rent out the product, make sure to pass this documentation on and point out that it is available online.

In regard to all occupational health and safety requirements associated with the machine's use, the manufacturer must conduct a risk assessment in accordance with Machinery Directive 2006/42/EC before a machine is placed on the market.

Operate the XN Safety module product exclusively with devices and accessories approved by Eaton for this purpose.

CAUTION

Handle the XN Safety module carefully and do not drop it.
Do not, under any circumstance, let any foreign objects or liquids get into the module.
Do not open the XN Safety module!
If the XN Safety module is not working as intended or if it sustains any damage that could result in a hazard being posed, replace it without fail!
The XN Safety module conforms to EN 61131-2.
When used in combination with a system, the system integrator must meet the requirements in standard EN 60204-1.
Make sure to observe all environmental conditions for your own safety and the safety of others.

2.2 Use as intended

The safety functions implemented with the Safety relay output module are intended for use in safety applications within the context of a PLC and meet all necessary requirements for safe operation in conformity with SIL 3 as defined in EN IEC 62061 and PL e / Cat. 4 as defined in EN ISO 13849-1.

CAUTION

Always observe the instructions and information in this operation manual. Properly transporting and storing the device are essential for proper operation.

The device must be installed, mounted, programmed, commissioned, operated, maintained, and removed from service exclusively by trained qualified personnel.

Within this context, "trained qualified personnel" refers to individuals who have received the required vocational training as skilled workers or who have been trained by a skilled worker and accordingly are authorized to operate and take care of safety devices and systems in compliance with all applicable safety (functional safety) guidelines, standards, and Directives.

For your safety and the safety of others, make sure to only use the Safety relay output module as intended.

This intended use also includes installing the device properly in terms of EMC.

Within this context, the following are instances of unintended use:

- Any alterations of any type made to the device, as well as the use of damaged devices.
- Using the device outside of the technical limits and scope described in this operating manual or outside of the specified technical data.

2.3 Software

The XN Safety Designer Configuration tool is used to program the Safety project. The application compiled from this project can then be transferred to the XN Safety CPU module.
For basic information regarding functional safety, please refer to the XN Safety system manual.

3. IT security

XN Safety modules have been developed for integration into networks that are secure against third-party access.

The network being used could be exposed to the following risks, for example:

- Unauthorized access
- Data tampering
- And many other IT security risks

The integrator, or the company operating the device, is responsible for conducting a risk assessment for the connections between XN Safety and the corresponding integration into the general infrastructure. This assessment can result in a variety of measures, including, but not limited to (if necessary):

- IT/OT network segmentation (VLANs or physical)
- Firewalls
- Password-protected user accounts
- Data encryption
- and much more.

When it comes to functional safety, the various functions and their integrity are completely invulnerable to direct manipulation in this regard, since these functions cannot be affected through communication-based interfaces.

However, the availability of the overall system (as is the case with all safety functions) can be negatively affected as a result of third-party attacks, which is why the aforementioned measures are required.

4. Directives and standards

4.1 Residual risks

CAUTION

The following residual risks for the Safety relay output module must be taken into account in the risk assessment conducted by the system integrator:

- Release of environmentally harmful substances, emissions, and unusual temperatures
- Dangerous touch voltages
- Effects of operational electric, magnetic, and electromagnetic fields
- Possible effects of IT devices

4.2 Machine or system safety

Observe all accident prevention and occupational health and safety standards and regulations that apply at the location of use.

4.3 Directives

The Safety relay output module has been designed in compliance with all applicable European Union Directives and tested for conformity accordingly.

4.3.1 Functional safety standards

EN IEC 62061	Safety of machinery - Functional safety of safety-related control systems
EN ISO 13849-1	Safety of machinery - Safety-related parts of control systems - Part 1: General principles for design
EN ISO 13849-2	Safety of machinery - Safety-related parts of control systems - Part 2: Validation

4.3.2 EC Declaration of Conformity

EU Declaration of Conformity
The Safety relay output moduleXS-322-2DO-RNOAC conforms to all applicable European standards for programmable logic controllers and complies with the following European Directives:

- **2006/42/EG** directive 2006/42/EG of the European Parliament and Council of 17 May 2006 on machinery, and amending Directive 95/16/EC (Machinery Safety Directive)
- **2014/30/EU** electromagnetic compatibility (EMC Directive)
- **2011/65/EU** Restriction of the use of certain hazardous substances in electrical and electronic equipment (RoHS Directive)

EU Declarations of Conformity are available on the EATON homepage. In addition, this one is included as a resource in the data sheet for the XS-322-2DO-RNOAC.

5. Safety-relevant characteristics

5.1 Horizontal mounting position, ambient temperature of 0–55 °C

Module	Safety characteristic values	Safety level
XS-322-2DO-RNOAC including XN Safety CPU module XS-102-C00-000	PFH = 1.10E-08 (1/h) SFF = 99 % $MTTF_D$ = 232 years DC = 98 %	SIL 3 as per EN IEC 62061 PL e / Cat. 4 as per EN ISO 13849

The above failure probability (PFH, $MTTF_D$ and SFF) is based on the assumption that the output relay is operated with 25,000 switching cycles per year (nop). If more switching cycles per year are required, you can request the safety parameters from Eaton via Support.

5.2 Horizontal mounting position, ambient temperature of 55–60 °C

Module	Safety characteristic values	Safety level
XS-322-2DO-RNOAC including XN Safety CPU module XS-102-C00-000	PFH = 1.10E-08 (1/h) SFF = 99 % $MTTF_D$ = 223 years DC = 98 %	SIL 3 as per EN IEC 62061 PL e / Cat. 4 as per EN ISO 13849

The above failure probability (PFH, $MTTF_D$ and SFF) is based on the assumption that the output relay is operated with 25,000 switching cycles per year (nop). If more switching cycles per year are required, you can request the safety parameters from Eaton via Support.

For the operating time of Safety relay output module see,
→ Section "Operating time of the relay output module depending on the number of switching cycles per year", page 27.

5.3 Compatibility

Compatibility
For more information on the compatibility of the XN Safety modules, please refer to the "Compatibility of XN Safety modules“ section in the XN Safety system manual.

6. Nameplate

The nameplate can be found on the Safety relay output module.

7. Technical specifications

7.1 Specification relay outputs

Qty.	2	
Version	Dual-channel	
Switching contact	Make	
Relay type	SIS212 21VDC SEN	
Rated operating voltage	+24 V DC	+230 V AC
Switching voltage	Up to +30 V DC	Up to +250 V AC
Maximum permissible continuous current/channel	Up to 6 A at 55 °C Up to 4 A at 60 °C	Up to 6 A at 55 °C Up to 4 A at 60 °C
Short-circuit protection and overload protection	External fuse category gG maximum 6 A	
Simultaneity of all outputs	100 %	
Pre-Arcing	typ. 10 ms[1)]	
Falling time	typ. 3 ms[1)]	
Additional information	No suppressor circuit	

[1)] Pure relay characteristics without consideration of the XN Safety designer application cycle time

This module exceeds the specified current consumption for XN Safety modules. Therefore, this module must be considered as two XN Safety modules.

7. Technical specifications
7.1 Specification relay outputs

Eigenschaften

- Relais mit zwangsgeführten Kontakten gemäss IEC 61810-3
- Anwendungstyp A
- Sichere Trennung (siehe Isolationsdaten)
- Geeignet für Printmontage
- Kompakte Bauform
- Geringe Nenn- und Halteleistung
- Kontaktbestückung SIS212: 2 NO + 1 NC

Abmessungen

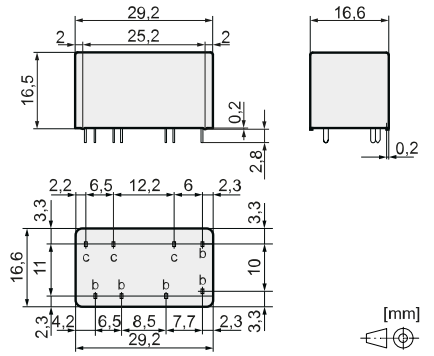

Pinmass b	1,0 x 0,3 mm
Pinmass c	1,0 x 0,4 mm
Empfohlene Bohrung auf PCB	Ø 1,3 mm

Spulendaten bei 20 °C

Nennleistung (typ.)	0,4 W
Halteleistung (typ.)	0,14 W
Spulengrenztemperatur	120 °C

Nennspannung (VDC)	Min. Ansprechspannung (VDC)	Min. Rückfallspannung (VDC)	Nennstrom (mA)	Widerstand (Ohm)
21,0	15,7	2,1	19	1 100 (1 ± 10 %)

Erregerspannungsbereich

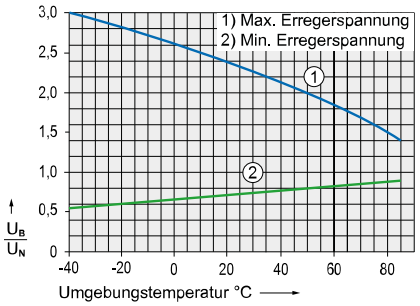

Prüfbedingungen:
- Kurve 1: Kontaktstrom 4 A MAX
- Kurve 2: ohne vorangegangenen Betrieb
- Relais freistehend auf PCB
- Einschaltdauer 100%

Kontaktdaten

Kontaktmaterial	AgCuNi + 0,2, ..., 0,4 µm Au
Kontaktart	Einfachkontakt mit Zackenkrone
Nennschaltleistung 250 V / 6 A / AC-1 (max.)	1 500 VA
Elektr. Lebensdauer (0,1 Hz, rel. ED 10%)	90 000
Einschaltstrom	30 A für 20 ms
Schaltspannungsbereich	5, ..., 250 V DC / AC
Schaltstrombereich*	3 mA, ..., 6 A
Schaltleistungsbereich*	40 mW, ..., 1 500 W (VA)
Übergangswiderstand (max.) im Neuzustand	100 mΩ
Kurzschlussfestigkeit Kontakte** mit Vorsicherung	1 000 A SCPD 6 A gG / gL (Schmelzsicherung)

* Richtwerte ** prospektiver Kurzschlussstrom

Elektrische Lebensdauer (NO-Kontakte)

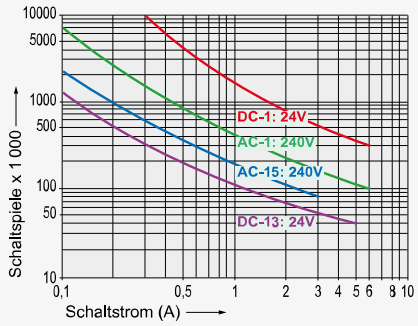

Schaltvermögen (IEC 61810-1)	
AC-1:	240 V / 6 A MAX
AC-15:	240 V / 3 A MAX
DC-1:	24 V / 6 A MAX
DC-13:	24 V / 5 A / 0,1 Hz MAX
Schaltvermögen (UL 508)	B300, R300
Dauerstrom je Kontakt bei Belastung von: 1 oder 2 Kontakten	6 A MAX

Kontaktlastgrenzkurve (DC)

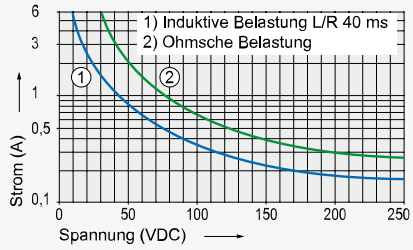

Schaltbild (Ansicht Relaisoberseite)

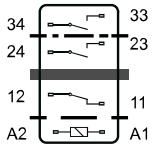

SIS212 SEN

Isolationsdaten

Bemessungs-Isolationsspannung (IEC 60664-1)	250 VAC
Basisisolierung	
- Luft- und Kriechstrecke (min.)	4 mm
- Prüfspannung	2 500 V_{eff} / 1 min
Doppelte bzw. verstärkte Isolierung	
- Luft- und Kriechstrecke (min.)	5,5 mm
- Prüfspannung	4 000 V_{eff} / 1 min
Doppelte bzw. verstärkte Isolierung	
- Luft- und Kriechstrecke (min.)	8 mm
- Prüfspannung	4 000 V_{eff} / 1 min
Offener Kontakt: Prüfspannung*	1 500 V_{eff} / 1 min
Kriechstromfestigkeit	CTI 175
Verschmutzungsgrad	2
Überspannungskategorie	III
Isolationswiderstand (min.)	100 MΩ
- Prüfspannung	500 VDC

* Anfangswert

Mechanische Daten

Lebensdauer (min.)	10 x 10^6 Schaltspiele
Schaltfrequenz (max.)	15 Hz
Ansprechzeit (NO geschlossen) (typ.)	10 ms
Rückfallzeit (NC geschlossen) (typ.)*	3 ms
Prellzeit (typ.)	NO: 2 ms / NC: 15 ms
Schockfestigkeit (16 ms) (min.)	NO: 17g / NC: 10g
Vibr.-Festigkeit (10-200 Hz) (min.)	NO: 7g / NC: 3g
Gewicht	ca. 20 g
Einbaulage	beliebig
Montageabstand (min.)	1 mm

* ohne Beschaltung der Spule

Weitere Daten

Umgebungstemperatur	-40 °C, ..., +85 °C
Thermischer Widerstand	55 K / W
Schutzart	RT III
Lötbadtemperatur	270 °C / 5 s
Prüfverfahren (Erwärmung)	A (Gruppenmontage)
Approbationen	cULus, TÜV
Brennbarkeitsklasse	UL 94 V-0
UL File	E188 953 Sec. 5

Optionen, Zubehör

keine verfügbar

Produktschlüssel

SIS 2 1 2 24VDC SEN

SIS	Typenbezeichnung	
2	Anzahl Kontakte NO	
1	Anzahl Kontakte NC	
2	Anschlusstechnologie	2 = Lötanschlüsse
24VDC	Spulennennspannung	
SEN	sensitive Spule	

Module Safety relay output module is only designed for a maximum switching voltage of +250 V AC / +30 V DC.

7.2 Operating time of the relay output module depending on the number of switching cycles per year

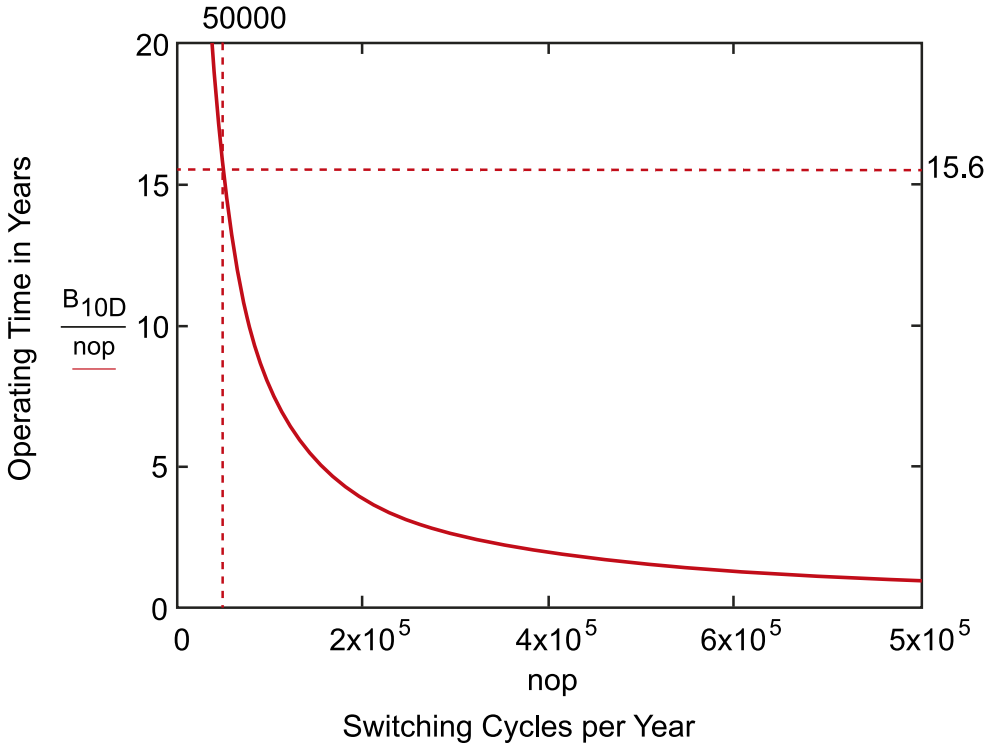

Lifetime Safety relay output module	20 years
B_{10D} value of the relay used	780000 switching operations under rated load

Worked example:

With 50000 switching operations per year, the relay output module must be replaced after 15.6 years.

$$\frac{B_{10D}}{50000} = 15.6$$

With 39,000 switching operations per year, the service life is 20 years.

7.3 Relay connection

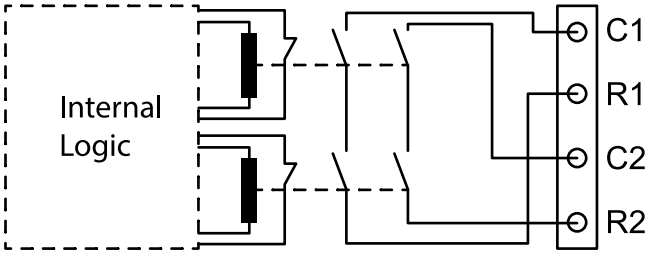

The outputs are designed internally as a series connection of two relays.

7.4 Electrical requirements

Voltage supply from safety bus	+12 V	
Current consumption on the safety bus (+12 V supply)	Normally 30 mA	Maximum 40 mA
Supply from XN Safety bus	+24 V	
Current consumption on XN Safety bus (+24 V supply)	Normally 90 mA	Maximum 100 mA

If this Safety relay output module is operated on a Safety CPU with several modules, the total currents of the XN Safety module used must be determined and checked!

The total current of the +24 V supply must not exceed 800 mA and the total current of the +12 V supply must not exceed 800 mA.
A maximum of 16 Safe I/O modules are supported by the XN Safety CPU module.
Thr Safety relay output module XS-322-2DO-RNOAC corresponds to two Safe I/O modules.

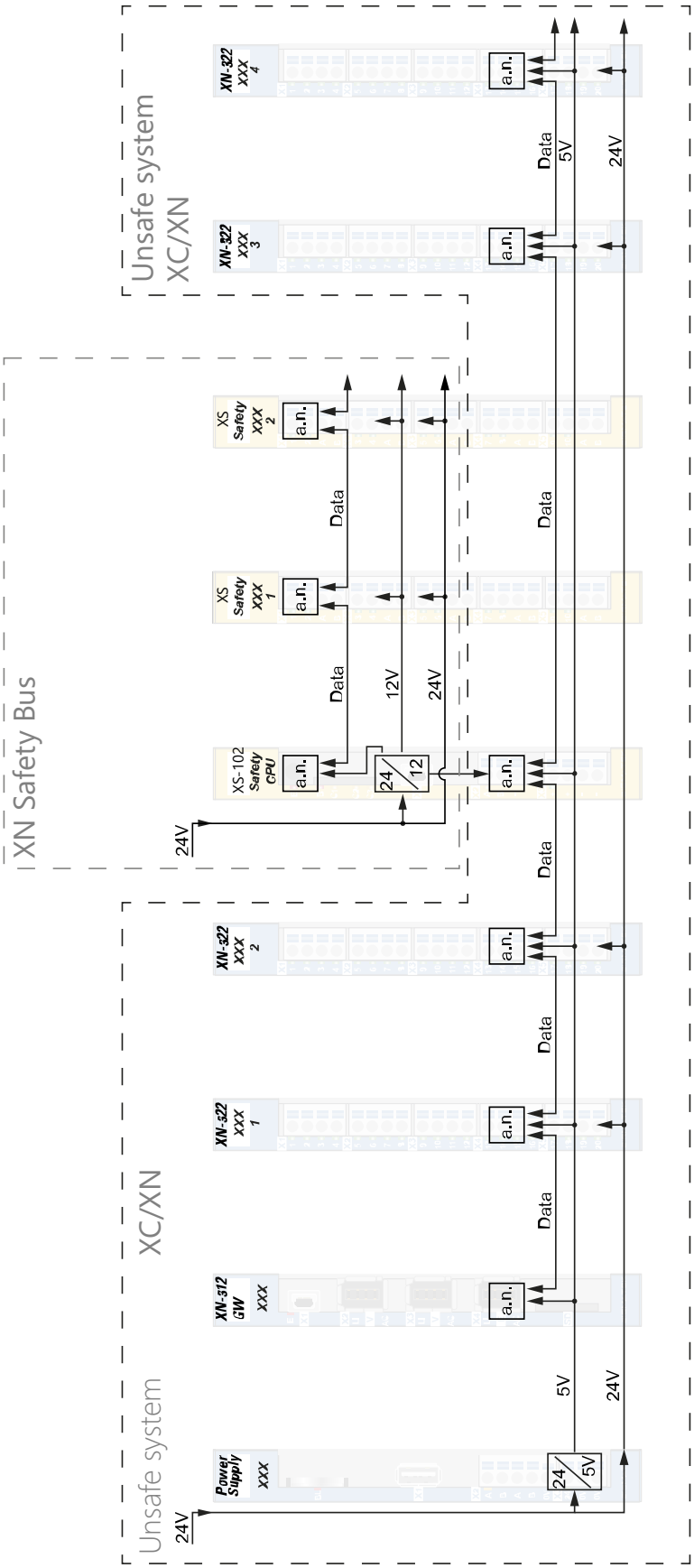

Wiring XN Safety System in the unsafe system XC/XN

-Each module is an active module. (active node)
-Safety CPU is connected to the XN Safety Bus (including +5V supply)
-The Safety Bus is independent and separate from the XC/XN unsafe system.

7.5 Additional information

Article number	EP-401360
Circuit card coating	No
Standardization	EN IEC 62061 SIL 3 EN ISO 13849-1 PL e/Cat. 4
Approvals	CE in preparation, designed according to UL, TÜV-Austria EC type-tested
Lifetime	20 years
Time of reaction	Please refer to the "Response time and shutdown time" section in the XN Safety system manual

7.6 Ambient conditions

Storage temperature	-20 – + 85 °C (-4 – +185 °F)	
Ambient temperature	± 0 – +55 °C (+32 – +131 °F) [UL] ± 0 – +60 °C (+32 – +140 °F) [CE]	
Humidity	0 - 95%, non-condensing	
Installation altitude	Max. 2000 m above sea level without derating > 2000 m to max. 5000 m with derating of the maximum ambient temperature by 0.5 °C per 100 m	
Operating conditions	Pollution Degree 2	
Noise emissions	≤ 70 dB	
EMC interference immunity	EN 61000-6-2 (industrial environments) EN 61000-6-7 (interference immunity for functional safety in industrial applications) (stricter requirements in conformity with EN IEC 62061)	
EMC emitted interference	EN 61000-6-4 (industrial environment)	
Vibration resistance	EN 60068-2-6	3.5 mm of 5-8.4 Hz 1 g of 8.4-150 Hz
Mechanical shock resistance	EN 60068-2-27	15 g (147.15 m/s²)
Protection Style	EN 60529/NEMA 250	IP20/type1

8. Mechanical dimensions

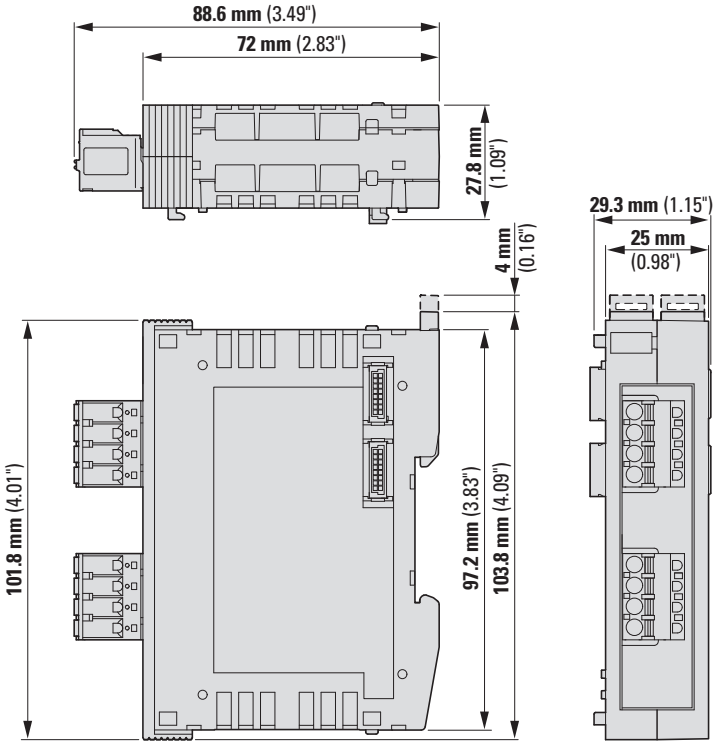

Dimensions (W x H x D)	29.3 mm x 104.2 mm x 80.3 mm (1.153" x 4.102" x 3.161") +/- 0.2 mm
Weight	161 gr

8.1 Pin assignment

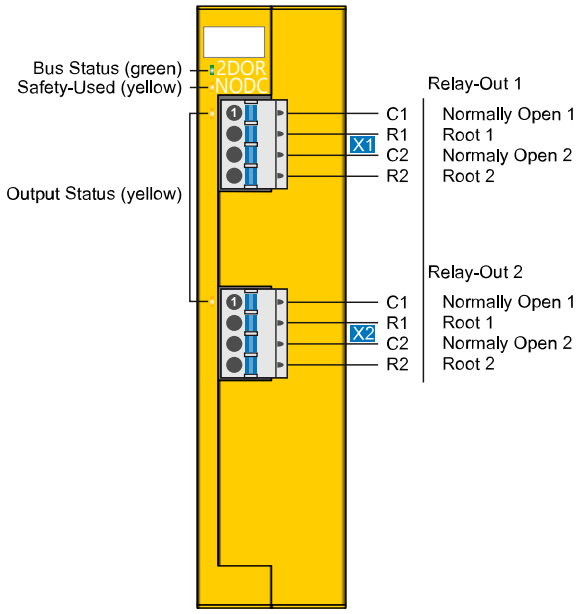

8.2 Status LEDs

Bus status	Green	ON	Bus communication OK
		OFF	No power supply available
		FLASHES (5 Hz)	No communications
Safety-Used	Yellow	ON	Module is used and no error
		OFF	Module is not used or not in operational mode
Output status	Yellow	ON	Output ON
		OFF	Output OFF

8.3 Plug connectors that should be used

X1-X2: Connector with push-in spring-cage terminal (included in the scope of supply)

The spring-cage terminals can be used to connect ultrasonically spliced (ultrasonically welded) wires.

Connection specifications :

Stripping length / ferrule length	10 mm
Angle of plug	Parallel to conductor axis or circuit card
Conductor cross-section, rigid	0.2-2.5 mm²
Conductor cross-section, flexible	0.2-2.5 mm²
Conductor cross-section, ultrasonically spliced wires	0.2-2.5 mm²
Conductor cross section, AWG/kcmil	24-12
Conductor cross-section, flexible with ferrule (uninsulated)	0.25-2.5 mm²
Conductor cross-section, flexible with ferrule (insulated)	0.25-2.5 mm² (reduction reason: d2 of ferrule)

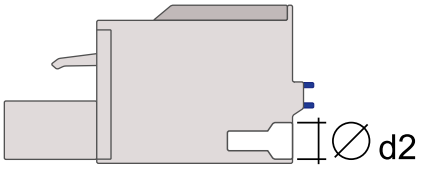

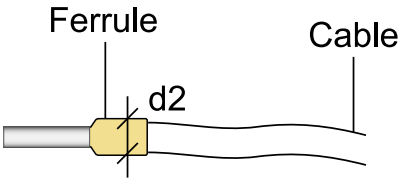

d2 = max. 3.8 mm

8.4 Labeling area

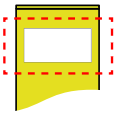

Manufacturer	Weidmüller
Type	MF 10/5 CABUR MC NE WS
Article number Weidmüller	1854510000
Compatible printers	Weidmüller
Type	Printjet Advanced 230V
Article number Weidmüller	1324380000

9. Wiring topic

9.1 Connection example

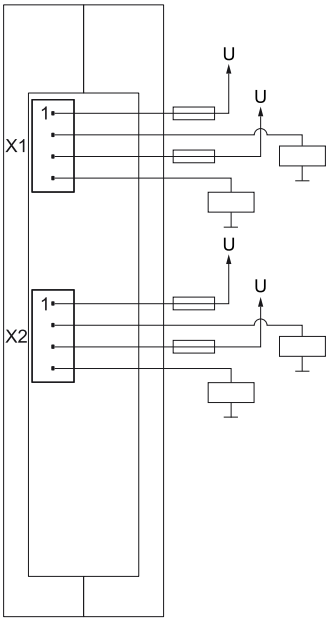

9.2 Notes

The input filters that suppress noise pulses make it possible to use the device in harsh environmental conditions. In addition, it is recommended to exercise particular care during wiring in order to ensure proper operation.

Observe the following installation instructions:

- Do not route the input cables parallel to load circuits.
- Suppressor circuit for all contactor coils (RC suppressors or flyback diodes)
- Correct grounding

If possible, connect the earth bus to the control panel earth bus!
De-energize the system before carrying out any wiring or installation work!
Do NOT, under any circumstance, connect or disconnect the XN Safety module while energized!

10. Mounting/Installation

10.1 Checking the included equipment

Make sure to check the included equipment to make sure everything is included and in perfect condition,
→ Section "Equipment supplied", page 15.

Check the XN Safety module for damage both when first receiving it and before using it for the first time. If the Safety relay output module is damaged, please contact our Customer Service Team and do not install the XN Safety module in your system.
Damaged components can disrupt or damage your system!

10.2 Mounting

XN Safety modulees are intended for installation in control cabinets. An EN/IEC 60715 DIN-rail is required in order to mount the modules. The DIN-rail must establish a conductive connection to the control panel's back plate. The individual XN Safety modulees need to be mounted side by side on the DIN-rail and then secured in place by closing the locking elements. The grounding tab at the back of the XN Safety modulees is used to establishing the functional earth connection between the module and the DIN-rail.

The device must always, without exception, be installed in a horizontal mounting position (module designation on top) with sufficient clearance between the XN Safety module block's vents and surrounding components / the control cabinet wall. This is necessary in order to achieve optimal cooling and air circulation so that the device's proper functionality will be guaranteed all the way up to the maximum operating temperature.

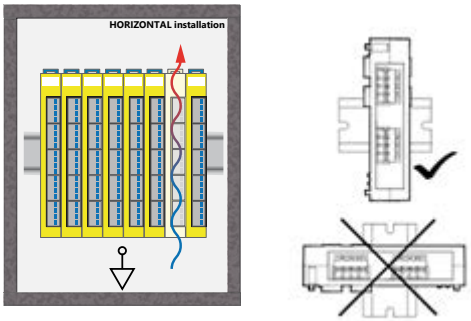

Fig. 1: Installation position - horizontal installation

Recommended minimum clearances between XN Safety modulees and surrounding components / the control cabinet wall:

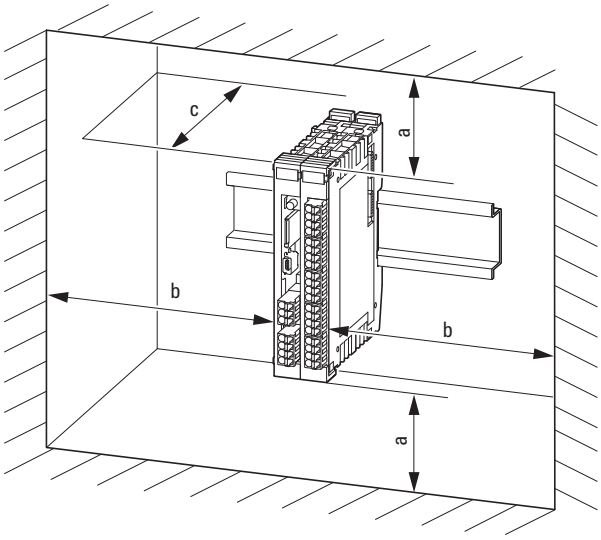

Clearances in mm (inch)
a, b ≧ 30 mm (1.18"), c ≧ 100 mm (3.94")
Operating temperature
ϑ: 0°C (32°F) ≦ T ≦ 55°C (131°F) [UL] or ± 0 – +60 °C (+32 – +140 °F) [CE]

11. Supported cycle times

The XS-322-2DO-RNOAC can be used with the XN Safety bus to carry out access operations with various bus cycle times.

11.1 Cycle times shorter than 1 ms (in µs)

50	100	125	200	250	500
x	x	x	x	x	x

x = supported

11.2 Cycle times greater than or equal to 1 ms (in ms)

1	2	3	4	5	6	7	8	9	10	11	12	13	14	15	16
x	x	x	x	x	x	x	x	x	x	x	x	x	x	x	x

17	18	19	20	21	22	23	24	25	26	27	28	29	30	31	32
x	x	x	x	x	x	x	x	x	x	x	x	x	x	x	x

x = supported

12. Transport/storage

This XN Safety module contains sensitive electronics. This means that you should make sure that it is not subjected to any large mechanical loads during transportation and storage.
The humidity, shock, and vibration conditions that apply during operation apply to storage and transportation as well!
Temperature and humidity fluctuations may occur during transportation. Accordingly, make sure that no moisture condenses inside the XN Safety module by turning off the XN Safety module and letting it acclimate to room temperature first.
If possible, ship / transport the XN Safety module in its original packaging. Otherwise, select packaging that will adequately protect the XN Safety module from external mechanical factors (a cardboard box filled with air pillows, for instance).

12.1 Storage

If you are not using the XN Safety module, store it in conformity with the corresponding storage conditions. For more information, please refer to → Section "Transport/storage", page 40.
Make sure that when the XN Safety module is stored, all protective caps (if any) are in place so that the device will not become soiled and foreign objects and liquids will be unable to get into it.

13. Maintenance

Follow all safety instructions during servicing and maintenance → Section "Basic safety instructions", page 16.

13.1 Maintenance

The XN Safety module has been specifically designed for low-maintenance operation.

13.2 Repairs

If the XN Safety module is defective or needs repairs, please send it to Eaton together with a detailed description of the problem.
Shipping conditions, → Chapter "13 Transport/storage", page 40.

14. Disposal

If you want to dispose of the XN Safety module, make sure to comply with all applicable national disposal regulations without fail.
Do not dispose of the XN Safety module with household waste.

Appendix

A.1 Further usage information 44
A.2 Data sheets 45

A.1 Further usage information

Hardware

For more information and information on additional XN Safety module, please refer to the following documentation:

XN Safety system manual	MN050020
Installation instructions XS-102-C00-000, XS-322-...	IL050036ZU
Operation manual XN Safety CPU module XS-102-C00-000	MN050019
Operation manual XN Safety module XS-322-10DI-PF	MN050021
Operation manual XN Safety module XS-322-8DO-P20	MN050022
Operation manual XN Safety module XS-322-8DIO-PF20	MN050023
Operation manual XN Safety module XS-322-2INC	MN050024
Operation manual XN Safety module XS-322-4AI-I2	MN050025
Operation manual XN Safety module XS-322-2DO-RNOAC	MN050026
Operation manual XN Safety module XS-322-2DO-RNODC	MN050027

Software

For information on XN Safety designer, open the XN Safety Designer Configuration tool software and then the user help (MN050028).

Download Center, Eaton Online Catalog

Enter "xnsafety" into the search box and the catalog will take you directly to the corresponding product group in the Automation, Control and visualization section.

Eaton.com/documentation

Eaton.com/ecat

Product information

For up-to-date information, please consult the product page on the Internet.

Eaton.com/xnsafety

A.2 Data sheets

For the latest information on available XN Safety modules, please refer to the data sheet for the module in the Eaton online catalog.

Eaton.com/ecat

XN Safety CPU module

EP-401352 XS-102-C00-000	Safety CPU module, SIL3/PLe, Cat. 4

XS-Safety modules as expansions

with relay outputs	
EP-401359 XS-322-2DO-RNODC	Safety Digital, 30 VDC 2 outputs, relay ,NO, 6 A
EP-401360 XS-322-2DO-RNOAC	Safety Digital, 230 VAC 2 outputs, relay, NO, 6 A

With digital inputs	
EP-401353 XS-322-10DI-PF	Safety Digital, 10 inputs, 24 VDC, 0.5ms

with digital output	
EP-401354 XS-322-8DO-P20	Safety Digital, 8 outputs, 24 VDC, 2 A

With digital inputs/outputs	
EP-401355 XS-322-8DIO-PF20	Safety Digital, 6 inputs / 2 outputs, 24 VDC, 0.5 ms, 2 A

Rotary encoder	
EP-401357 XS-322-2INC	Safety rotary encoder, 2 inputs, incremental, 12-bit

with analog inputs	
EP-401356 XS-322-4AI-I2	Safety Analog current input, 4 inputs, 4-20 mA, 16-bit

Accessory devices

Cat No. and type	Description
191080 XC-303-C32-002	XC modular PLC XC303, Small PLC, CODESYS 3 programmable, SD Slot, USB, 3x Ethernet, 2x CAN, RS485, four digital inputs/outputs
191081 XC-303-C32-001	XC modular PLC XC303, Small PLC, CODESYS 3 programmable, SD Slot, USB, 2x Ethernet, CAN, RS485
191082 XC-303-C32-000	XC modular PLC XC303, Small PLC, CODESYS 3 programmable, SD Slot, Ethernet, CAN
199973 XC-204-C10-000	Modular PLC XC204, Micro PLC, programmable CODESYS 3, USB, Ethernet
199975 XC-204-C21-001	Modular PLC XC204, Micro PLC, programmable CODESYS 3, USB, 2x Ethernet, CAN, 2DIO
199977 XC-204-C20-002	Modular PLC XC204, Micro PLC, programmable CODESYS 3, USB, 2x Ethernet, RS485, 2DIO
199971 XC-104-C10-000	Modular PLC XC104, Micro PLC, programmable CODESYS 3, USB, Ethernet
178782 XN-312-GW-CAN	XN-312 gateway to bus system CANopen
178785 XN-312-GW-EC	XN-322 digital input module, 20 digital inputs with 24 VDC each, pulse-switching, 5.0 ms
191087 MEMORY-SDU-A1	microSD card
206903 TS-CI-K3	DIN-rail that fit to 4RU
206904 TS-CI-K4	DIN-rail that fit to 6RU

Alphabetical index

A

After Sales Service 2
Ambient conditions 31

B

Brand names
    Product names 2

C

Company information 2
Compatibility 23
Copy-protected 2
Copyright 2
Cycle times 39

D

Description 15
Directives 20
Download Center 44

E

ecat 44

F

Further reading 44

I

Intended use 17
IT security 19

L

Labeling area 35

M

Manuals 44

O

Online Catalog 44
Original Operating Instructions 2

P

Pin assignment 33
Plug connectors 34

R

Residual risks 20

S

Safety-relevant characteristics 22
Software 18
Standards 20

Eaton is an intelligent power management company dedicated
to improving the quality of life and protecting the environment for people everywhere. We are guided by our commitment to do business right, to operate sustainably and
to help our customers manage power – today and well into the future.
By capitalizing on the global growth trends of electrification and digitalization, we're accelerating the planet's transition to renewable energy, helping to solve the world's most urgent power management challenges, and doing what's best for our stakeholders and all of society.

For more information, visit eaton.com.

Eaton Industries GmbH
Hein-Moeller-Str. 7–11
D-53115 Bonn

© 2025 Eaton Corporation
All rights reserved
06/2025 MN050027EN

Powering Business Worldwide