Technical data sheet

Fastening clip, plant standard 7855, double-lobe

Item number: 1044060

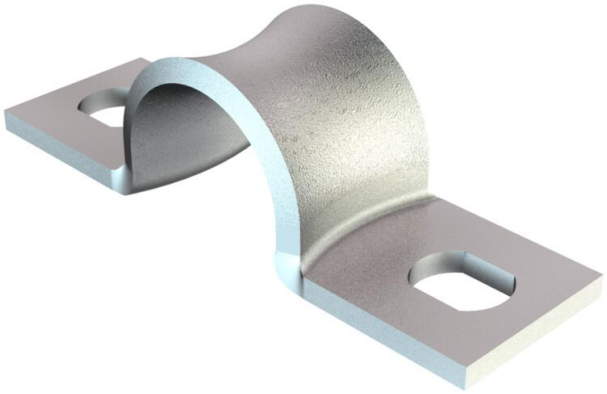

Dimensions to Siemens standard SN 78550, shape B, with strongly rounded edges, thus particularly suitable for sensitive cables.
* Sizes 3 to 10 not suitable for nail device.

CE UK CA

St Steel

GTP Electrogalvanised, transparently-passivated

Master data

Item number	1044060
Type	WN 7855 B 4
Description 1	Fastening clip
Description 2	two lobe
Manufacturer	OBO
Dimension	4mm
Material	Steel
Surface Surface standard	Electrogalvanised, transparently-passivated
Smallest sales unit	100
Unit of quantity	Piece
Weight	0.082 kg
Weight unit	kg/100 pc.
CO2 Footprint (GWP) Cradle-to-Gate	0,0023 kg CO2e / 1 Piece

Technical data sheet

Fastening clip, plant standard 7855, double-lobe

Item number: 1044060

Dimensions

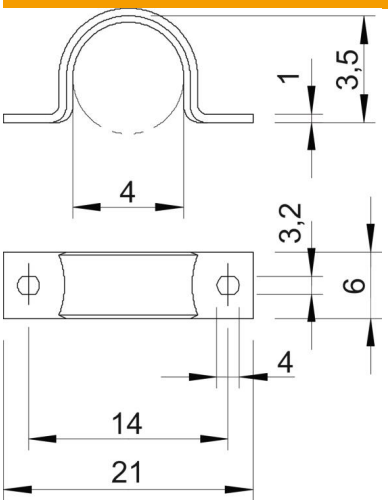

Length	21 mm
Width	6 mm
Height	3.5 mm
Dimension A	21 mm
Dimension B	14 mm
Dimension b	6 mm
Dimension D	4 mm
Dimension d	3.2 mm
Dimension e	4 mm
Dimension H	3.5 mm
Dimension L	21 mm
Dimension t	1 mm

Technical data

Distance to the wall	no
Number of cables/pipes	1
Version for	Two-lobe
Fastening type	Screw hole
For diameter	4
Suitable in fire protection area	no
Halogen-free	yes
Plastic-covered	no
Hole size	3,2 x 4
Material thickness	0.8 mm
Nominal diameter	4 mm
ROHS-conformant	yes
UV-resistant	yes