Data Sheet | Item Number: 891-8994/116-401

pre-assembled connecting cable; Eca; Socket/open-ended; 4-pole; Cod. A; H05Z1Z1-F 4G 1.5 mm²; 4 m; 1,50 mm²; black

https://www.wago.com/891-8994/116-401

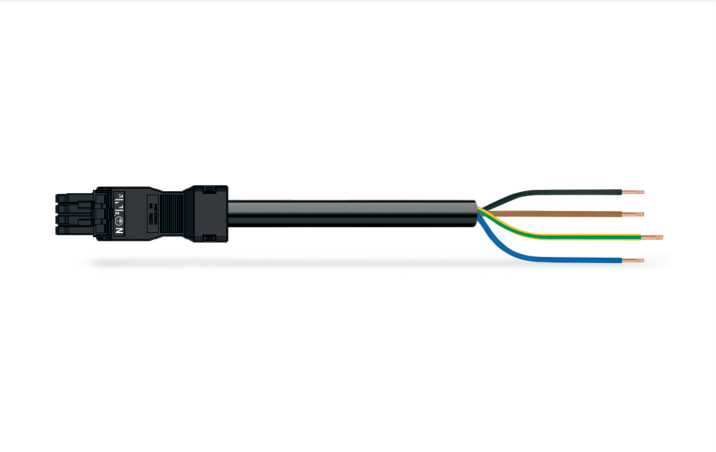

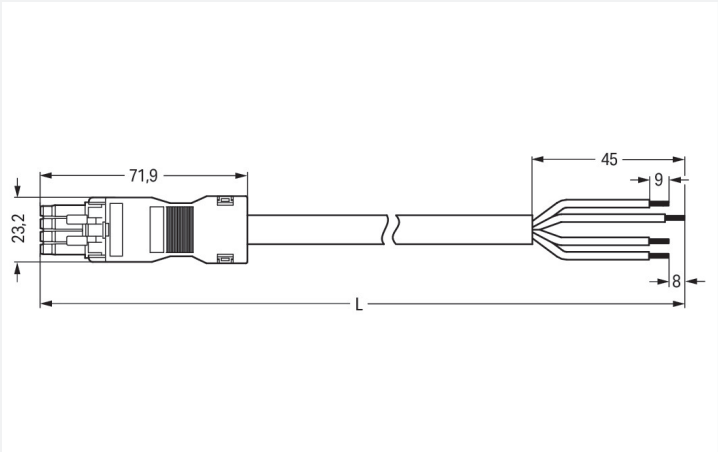

Color: ■ black

Dimensions in mm

Cable assembly *WINSTA*® MINI A coding

The *WINSTA*® MINI cable assembly with protection against mismating is the pluggable solution for your use in control cabinets, for lighting connections or on PCBs. WAGO pluggable installation connectors can be used when specifications repeat or are distributed on a specific grid, for example for installing grid lighting or flush-mount lighting. For greater protection in electrical installations, the pluggable installation connector is provided with mechanical protection against mismating. The pluggable installation connector is protected in accordance with protection type IP40. Users' hands and tools will never come into contact with live elements. General mains applications for almost any domain of use can be implemented with *WINSTA*® MINI pluggable installation connectors with A coding. Especially if only limited space is available, our smallest pluggable connection system, *WINSTA*® MINI, consistently displays its strengths. It saves space, and, thanks to Push-in CAGE CLAMP® spring pressure connection technology, it additionally saves time, since the installation is low-maintenance and can be performed without screw connections. According to the European CPR, the fire class of the cables used in construction is essential for the safety of buildings, too. For houses with average safety requirements, cable assemblies with fire class E are suitable. The cable assembly is free of halogen. This eliminates the addition of environmental pollutants during production. It also achieves a higher fire class, since halogen-free materials do not easily ignite.

Pluggable connections instead of screw connections – cable assemblies from WAGO

The cable is pre-assembled with a socket and a free end. The WINSTA® Pluggable Connection System allows pluggable electrical installation. This saves time, lowers costs, and reduces the need for servicing. Choose quality and durability – with marking from WAGO makes the installation of electrical components noticeably easier.

- effective protection against mismating
- easy tool-free operation, a wide range of coding options
- with A coding for a large number of applications
- custom-engineered solutions
- convenient installation and commissioning

 Continued on next page

Notes

Note	Cables with a different fire class can be found in the eShop.

Electrical data

Ratings per	IEC/EN 60664-1		
Overvoltage category	III	III	II
Pollution degree	3	2	2
Nominal voltage	400 V	-	-
Rated impulse withstand voltage	6 kV	-	-
Rated current	16 A	-	-

General information	
Note on contact resistance	approx. 1 mΩ of contact resistance approx. 0.25 mΩ contact transition plug/ socket

Connection Data

Total number of potentials	4
PE function	Preceding PE contact
Conductor preparation	ultrasonically tip-bonded

Connection 1	
Strip length	9 mm / 0.35 inches
Pole number	4
Wire cross-section	1.5 mm²
Strip length (outer insulation)	45 mm
Connection type	Socket - free end

Physical data

Pin spacing	4.4 mm / 0.173 inches
Width	23.2 mm / 0.913 inches
Height	16 mm / 0.63 inches
Total length	4 m

Mechanical data

Use	General mains applications
Coding	A
Variable coding	No
Marking	N ⏚ 2/L 1/L'
Potential marking	N ⏚ 2/L 1/L'
Mating force of a plug-in connection	approx. 20 … 70 N (depending on pole number)
Retention force of a plug-in connection	when locked: > 80N
Unmating force of a plug-in connection	when unlocked: approx. 20 … 70 N (depending on pole number)
Number of mating cycles	200, without resistive load
Connection type	Socket - free end
Type of pre-assembled cable	Connecting cable
Cable type	H05Z1Z1-F 4G1.5
Protection type	IP40

 Continued on next page

Plug-in connection

Mismating protection	Yes
Note on mismating protection	All *WINSTA*® components are 100% protected against mismating when: a.) plugging different numbers of poles b.) plugging while rotated 180 c.) plugging while laterally staggered d.) plugging one pole
Locking lever	Can be retrofitted
Locking of plug-in connection	Locking lever
Note on locking system	All connectors for mounted installations (snap-in versions for lighting fixtures or devices, all types of PCB and distribution connectors) are factory-equipped with locking levers to ensure plugs and sockets are securely locked. Additional locking levers are only required for flying leads (plug/socket).

Material data

Note (material data)	Information on material specifications can be found here
Color	black
Insulation material (main housing)	Polyamide (PA66)
Fire class per EN 50575	E_{ca}
Contact material	Copper or copper alloy; surface-treated
Contact Plating	Tin
Fire load	119.915 MJ
Connector color	black
Strain relief color	black
Sheathed cable color	black
Printing color of sheathed cable	white
Halogen-free	Yes
Silicon-free	Yes
Sheath material	Halogen-free
Rubber cable	No
Weight	481.6 g
Copper weight of the raw cable	0.058 kg/m

Environmental requirements

Processing temperature	-5 … +40 °C
Continuous operating temperature	-35 … +85 °C
Note on continuous operating temperature	Cable for temperatures ≤ 70 °C (including halogen-free) Insulating parts for temperatures ≤ 105 °C

Commercial data

PU (SPU)	1 pcs
Packaging type	unpacked
Country of origin	PL
GTIN	4055143405096
Customs tariff number	85444290900

 Continued on next page

Product Classification

UNSPSC	26121629
eCl@ss 10.0	27-44-06-04
eCl@ss 9.0	27-44-06-04
ETIM 9.0	EC002587
ETIM 10.0	EC002587
ECCN	NO US CLASSIFICATION

Environmental Product Compliance

RoHS Compliance Status	Compliant,No Exemption

Approvals / Certificates

General approvals

Approval	Standard	Certificate Name
CCA DEKRA Certification B.V.	EN 61535	NTR NL-7971
KEMA/KEUR DEKRA Certification B.V.	EN 61535	71-123232

Downloads

Environmental Product Compliance

Compliance Search

Environmental Product Compliance
891-8994/116-401

Documentation

Bid Text

891-8994/116-401	19.02.2019	xml 3.01 KB	
891-8994/116-401	01.12.2014	doc 25.00 KB	

CAD/CAE-Data

CAE data

EPLAN Data Portal
891-8994/116-401

WSCAD Universe
891-8994/116-401

 Continued on next page

1 Compatible Products

1.1 Required Accessories

1.1.1 Locking system

1.1.1.1 Locking system

Item No.: 890-111
Locking lever; for flying leads; for tool operation; black

Item No.: 890-131
Locking lever; for flying leads; for tool operation; white

Item No.: 890-101
Locking lever; for manual operation; black

Item No.: 890-121
Locking lever; for manual operation; white

1.2 Optional Accessories

1.2.1 Cover

1.2.1.1 Cover

Item No.: 897-2003
Protective cap; Type2; for sockets and plugs; PVC; red

1.2.2 Installation

1.2.2.1 Mounting accessories

Item No.: 890-310
Mounting carrier; 2- to 5-pole; for flying leads; black

Item No.: 890-311
Mounting carrier; 2- to 5-pole; for flying leads; white