# Data Sheet | Item Number: 216-106

Ferrule; Sleeve for 2.5 mm² / AWG 14; uninsulated; electro-tin plated; silver-colored

https://www.wago.com/216-106

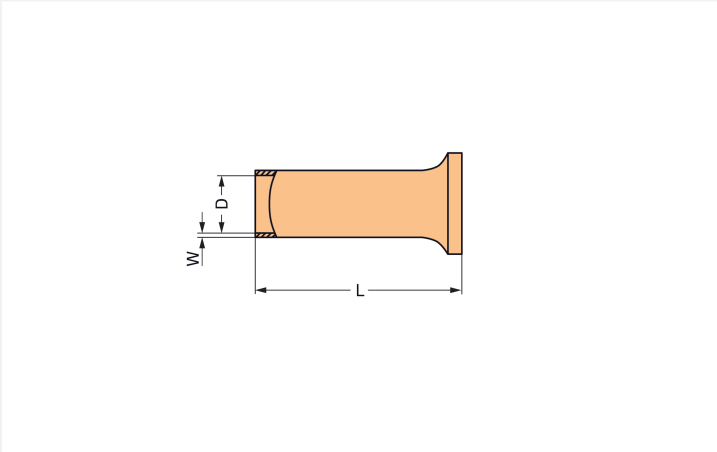


Color: silver-colored

Dimensions in mm

| Connection Data | |
|---|---|
| Metric cross-section of the ferrule | 2.5 mm² |
| Strip length | 10 mm / 0.39 inches |
| Cross-section (AWG) of ferrule | 14 AWG |

| Physical data | |
|---|---|
| Total length | 10 mm |
| Wall thickness of crimp sleeve | 0.2 mm |
| Diameter crimp sleeve inside | 2.1 mm |

| Mechanical data | |
|---|---|
| Plastic collar | No |

| Material data | |
|---|---|
| Color | silver-colored |
| Fire load | 0 MJ |
| Weight | 0.1 g |

| Commercial data | |
|---|---|
| Product Group | 2 (Terminal Block Accessories) |
| PU (SPU) | 5000 (1000) pcs |
| Packaging type | Box |
| Country of origin | DE |
| GTIN | 4017332277686 |
| Customs tariff number | 85369010000 |


Continued on next page

## Product Classification

| | |
|---|---|
| UNSPSC | 39121405 |
| eCl@ss 10.0 | 27-40-02-01 |
| eCl@ss 9.0 | 27-40-02-01 |
| ETIM 9.0 | EC000005 |
| ETIM 10.0 | EC000005 |
| ECCN | NO US CLASSIFICATION |

## Environmental Product Compliance

| | |
|---|---|
| RoHS Compliance Status | Compliant,No Exemption |

## Downloads

### Environmental Product Compliance

**Compliance Search**

Environmental Product Compliance 216-106

### Documentation

**Bid Text**

| | | | |
|---|---|---|---|
| 216-106 | 11.09.2017 | doc<br>24.00 KB | |
| 216-106 | 19.02.2019 | xml<br>2.77 KB | |

## Installation Notes

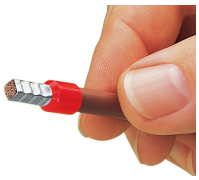

A perfect gas-tight crimp – both electrically and mechanically reliable