Data Sheet | Item Number: 216-124

Ferrule; Sleeve for 1.5 mm² / AWG 16; uninsulated; electro-tin plated

https://www.wago.com/216-124

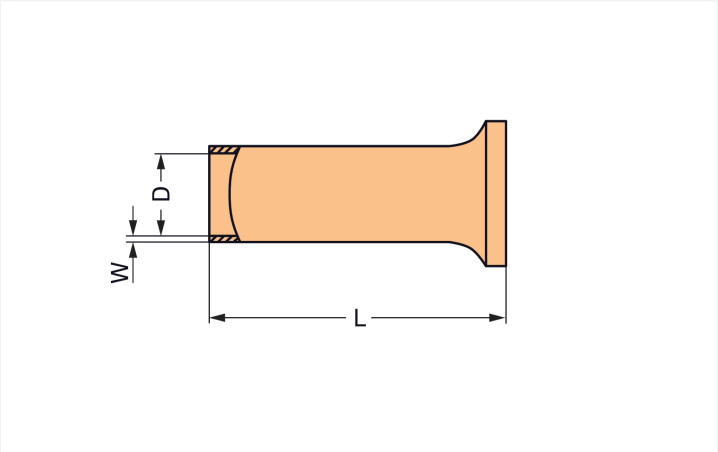

Dimensions in mm

Connection data

Metric cross-section of the ferrule	1.5 mm²
Strip length	6 mm / 0.24 inches
Cross-section (AWG) of ferrule	16 AWG

Physical data

Total length	6 mm
Wall thickness of crimp sleeve	0.15 mm
Diameter crimp sleeve inside	1.7 mm

Mechanical data

Plastic collar	No

Material data

Fire load	0 MJ
Weight	0.1 g

Commercial data

Product Group	2 (Terminal Block Accessories)
PU (SPU)	5000 (1000) pcs
Packaging type	Box
Country of origin	DE
GTIN	4017332277662
Customs tariff number	85369010000

Continued on next page

Product Classification

UNSPSC	39121405
eCl@ss 10.0	27-40-02-01
eCl@ss 9.0	27-40-02-01
ETIM 9.0	EC000005
ETIM 8.0	EC000005
ECCN	NO US CLASSIFICATION

Environmental Product Compliance

RoHS Compliance Status	Compliant,No Exemption

Downloads

Environmental Product Compliance

Compliance Search

Environmental Product Compliance 216-124

Documentation

Bid Text

216-124	11.09.2017	doc 24.00 KB	
216-124	19.02.2019	xml 2.77 KB	

Installation Notes

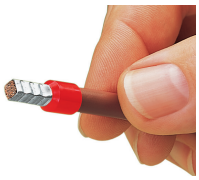

A perfect gas-tight crimp – both electrically and mechanically reliable