Data Sheet | Item Number: 216-131

Ferrule; Sleeve for 0.25 mm² / AWG 24; uninsulated; electro-tin plated; silver-colored

https://www.wago.com/216-131

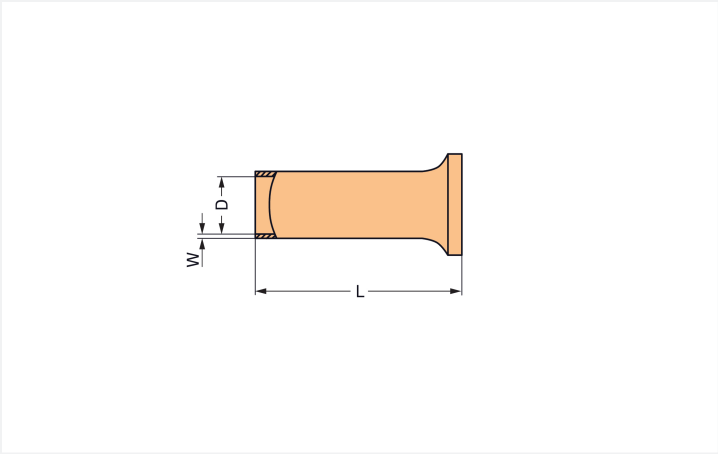

Color: silver-colored

Dimensions in mm

Connection Data	
Metric cross-section of the ferrule	0.2 mm²
Strip length	7 mm / 0.28 inches
Cross-section (AWG) of ferrule	24 AWG

Physical data	
Total length	7 mm
Wall thickness of crimp sleeve	0.15 mm
Diameter crimp sleeve inside	0.7 mm

Mechanical data	
Plastic collar	No

Material data	
Color	silver-colored
Fire load	0 MJ
Weight	0 g

Commercial data	
Product Group	2 (Terminal Block Accessories)
PU (SPU)	5000 (1000) pcs
Packaging type	Box
Country of origin	DE
GTIN	4017332277570
Customs tariff number	85369010000

Continued on next page

Product Classification

UNSPSC	39121405
eCl@ss 10.0	27-40-02-01
eCl@ss 9.0	27-40-02-01
ETIM 9.0	EC000005
ETIM 10.0	EC000005
ECCN	NO US CLASSIFICATION

Environmental Product Compliance

RoHS Compliance Status	Compliant,No Exemption

Downloads

Environmental Product Compliance

Compliance Search

Environmental Product Compliance 216-131

Documentation

Bid Text

216-131	11.09.2017	doc 24.00 KB	
216-131	19.02.2019	xml 2.77 KB	

Installation Notes

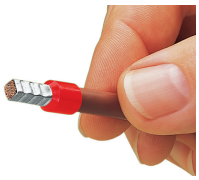

A perfect gas-tight crimp – both electrically and mechanically reliable