Technical data sheet

Fastening clip 824 VA

Item number: 1016555

Fastening clip for 2 cables with central strap



CE

A2	Stainless steel
2B	Bright, treated

Master data

Item number	1016555
Type	824 12 A2
Description 1	Fastening clip
Description 2	single lobe, 2 cables
Manufacturer	OBO
Dimension	12mm
Material	Stainless steel 1.4301
Surface Surface standard	Bright, treated
Smallest sales unit	50
Unit of quantity	Piece
Weight	2.31 kg
Weight unit	kg/100 pc.
CO2 Footprint (GWP) Cradle-to-Gate	0,0992 kg CO2e / 1 Piece

Technical data sheet

Fastening clip 824 VA

Item number: 1016555

Dimensions

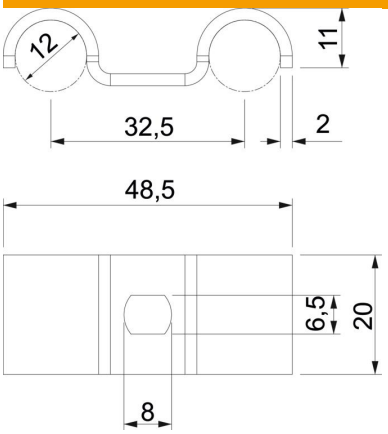

Height	11 mm
Dimension A	48.5 mm
Dimension b	20 mm
Dimension D	12 mm
Dimension d	6.5 mm
Dimension e	8 mm
Dimension L	16 mm
Dimension t	2 mm

Technical data

Distance to the wall	no
For diameter	12
Suitable in fire protection area	no
Halogen-free	yes
Plastic-covered	no
ROHS-conformant	yes
UV-resistant	yes