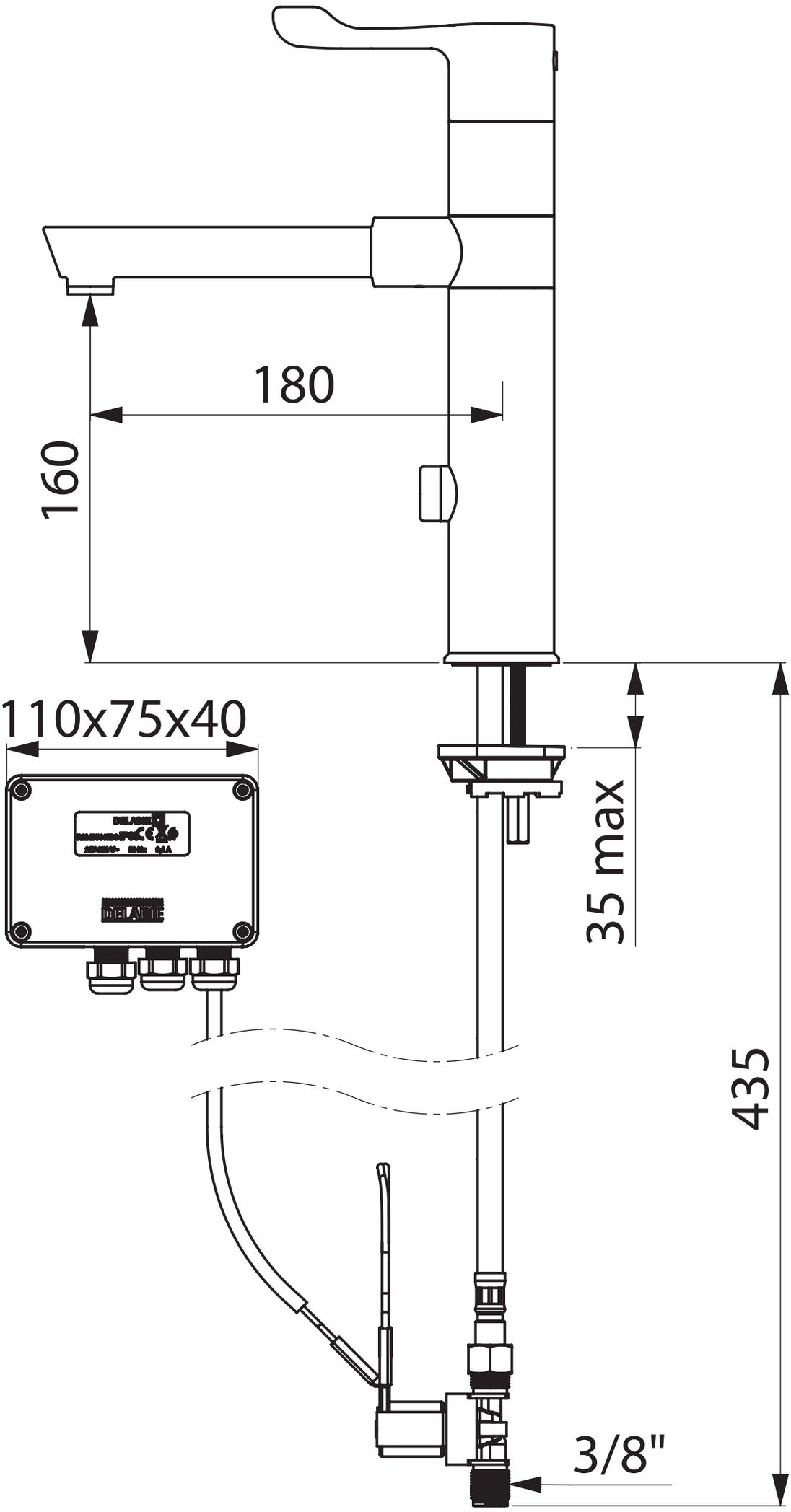
180
160
110x75x40
35 max
435
3/8"