Technical data sheet

Fastening clip 605, medium duty, G

Item number: 1018167



Two lobe fastening clips for cables and pipes.
* Sizes 7 to 12 not suitable for bolt-firing tool.

CE UK CA

St	Steel
G	Electrogalvanised

Master data

Item number	1018167
Type	605 16 G
Description 1	Fastening clip
Description 2	two lobe
Manufacturer	OBO
Dimension	16mm
Material	Steel
Surface	Electrogalvanised
Surface standard	EN ISO 19598 / EN ISO 4042
Smallest sales unit	100
Unit of quantity	Piece
Weight	0.585 kg
Weight unit	kg/100 pc.
CO2 Footprint (GWP) Cradle-to-Gate	0,0159 kg CO2e / 1 Piece

Technical data sheet

Fastening clip 605, medium duty, G

Item number: 1018167

Dimensions

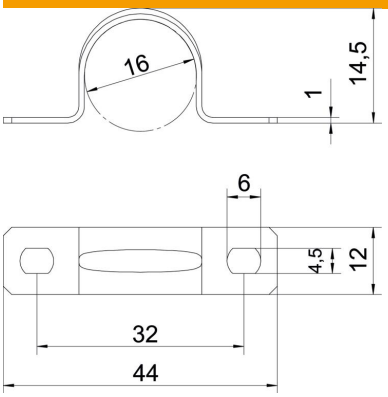

Length	44 mm
Width	12 mm
Height	14.5 mm
Dimension A	44 mm
Dimension B	32 mm
Dimension b	12 mm
Dimension D	16 mm
Dimension d	4.5 mm
Dimension e	6 mm
Dimension H	14.5 mm
Dimension t	1 mm

Technical data

Distance to the wall	no
Number of cables/pipes	1
Version for	Two-lobe
Fastening type	Screw hole
For diameter	16
Suitable in fire protection area	no
Halogen-free	yes
Plastic-covered	no
Hole size	4,5 x 6
Material thickness	1 mm
Nominal diameter	16 mm
ROHS-conformant	yes
UV-resistant	yes