Technical data sheet

Base clamp clip, single

Item number: 2140284



Can be screwed onto M6 thread.

HALOGEN FREE CE

PP Polypropylene

Master data

Item number	2140284
Type	2962 28 LGR
Description 1	Base clamp
Manufacturer	OBO
Dimension	25-28mm
Colour	Light grey; RAL 7035
Material	Polypropylene
Smallest sales unit	25
Unit of quantity	Piece
Weight	0.948 kg
Weight unit	kg/100 pc.
CO2 Footprint (GWP) Cradle-to-Gate	0,041 kg CO2e / 1 Piece

Technical data sheet

Base clamp clip, single

Item number: 2140284

Dimensions

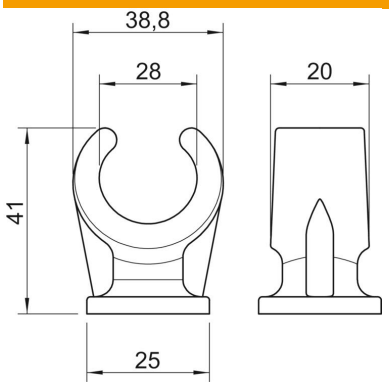

Dimension A	38.8 mm
Dimension B	20 mm
Dimension C	25 mm
Dimension H	41 mm

Technical data

Number of cables/pipes	1
Version for	Single-lobe
Fastening type	Threaded connection
Suitable in fire protection area	no
Size	25-28
Halogen-free	yes
Plastic-covered	no
Nominal diameter	25 mm
ROHS-conformant	yes
Clamping range D, max.	28 mm
Clamping range D, min.	25 mm
UV-resistant	no