Technical data sheet

Screw-in spacer clip, heavy-duty version M10

Item number: 1388053

Can be screwed onto M10 thread. Size 27 FT is suitable for M25. Size 48.5 FT is suitable for M50. Size 60 FT is suitable for M63.



CE UK CA

St Steel

FT Hot-dip galvanised

Master data

Item number	1388053
Type	2900WM10 27 FT
Description 1	Distance saddle
Description 2	with threaded connection M10
Manufacturer	OBO
Dimension	3/4"
Material	Steel
Surface	Hot-dip galvanised
Surface standard	DIN EN ISO 1461
Smallest sales unit	25
Unit of quantity	Piece
Weight	6.144 kg
Weight unit	kg/100 pc.
CO2 Footprint (GWP) Cradle-to-Gate	0,146 kg CO2e / 1 Piece

Technical data sheet

Screw-in spacer clip, heavy-duty version M10

Item number: 1388053

Dimensions

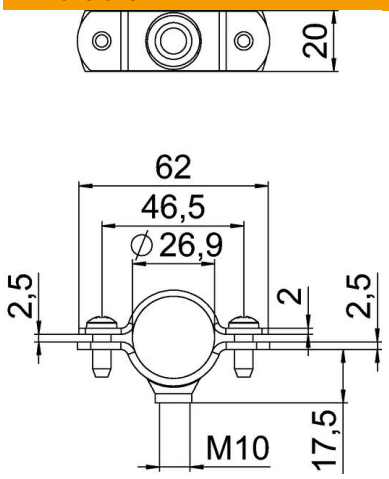

Length	62 mm
Width	20 mm
Dimension A	62 mm
Dimension B	46 mm
Dimension L	62 mm
Dimension t	2 mm
Dimension t1 (mm)	2.5 mm
Dimension x	2.5 mm

Technical data

Version for	Closed
Fastening type	Screw hole
For diameter	27
for pipe diameter	M25
Suitable in fire protection area	no
Thread	M10
Size	3/4"
Halogen-free	no
Plastic-covered	no
Hole size	M10
ROHS-conformant	yes
Bolt	M6 x 20
Clamping range D, max.	27 mm
Clamping range D, min.	24.5 mm
UV-resistant	yes