# Technical data sheet

## Screw-in spacer clip, heavy-duty version M10

## Item number: 1388061

Can be screwed onto M10 thread. Size 27 FT is suitable for M25. Size 48.5 FT is suitable for M50. Size 60 FT is suitable for M63.



CE UKCA

St Steel

FT Hot-dip galvanised

### Master data

| | |
|---|---|
| Item number | 1388061 |
| Type | 2900WM10 33.5 FT |
| Description 1 | Distance saddle |
| Description 2 | with threaded connection M10 |
| Manufacturer | OBO |
| Dimension | 1" |
| Material | Steel |
| Surface | Hot-dip galvanised |
| Surface standard | DIN EN ISO 1461 |
| Smallest sales unit | 25 |
| Unit of quantity | Piece |
| Weight | 6.864 kg |
| Weight unit | kg/100 pc. |
| CO2 Footprint (GWP) Cradle-to-Gate | 0,1561 kg CO2e / 1 Piece |

# Technical data sheet

## Screw-in spacer clip, heavy-duty version M10

## Item number: 1388061

### Dimensions

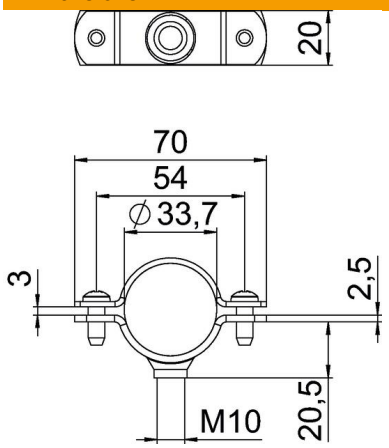


| | |
|---|---|
| Length | 70 mm |
| Width | 20 mm |
| Dimension A | 70 mm |
| Dimension B | 54 mm |
| Dimension L | 70 mm |
| Dimension t | 2 mm |
| Dimension t1 (mm) | 2.5 mm |
| Dimension x | 3 mm |

### Technical data

| | |
|---|---|
| Version for | Closed |
| Fastening type | Screw hole |
| For diameter | 33,5 |
| for pipe diameter | M32 |
| Suitable in fire protection area | no |
| Thread | M10 |
| Size | 1" |
| Halogen-free | no |
| Plastic-covered | no |
| Hole size | M10 |
| ROHS-conformant | yes |
| Bolt | M6 x 20 |
| Clamping range D, max. | 33.5 mm |
| Clamping range D, min. | 30.5 mm |
| UV-resistant | yes |