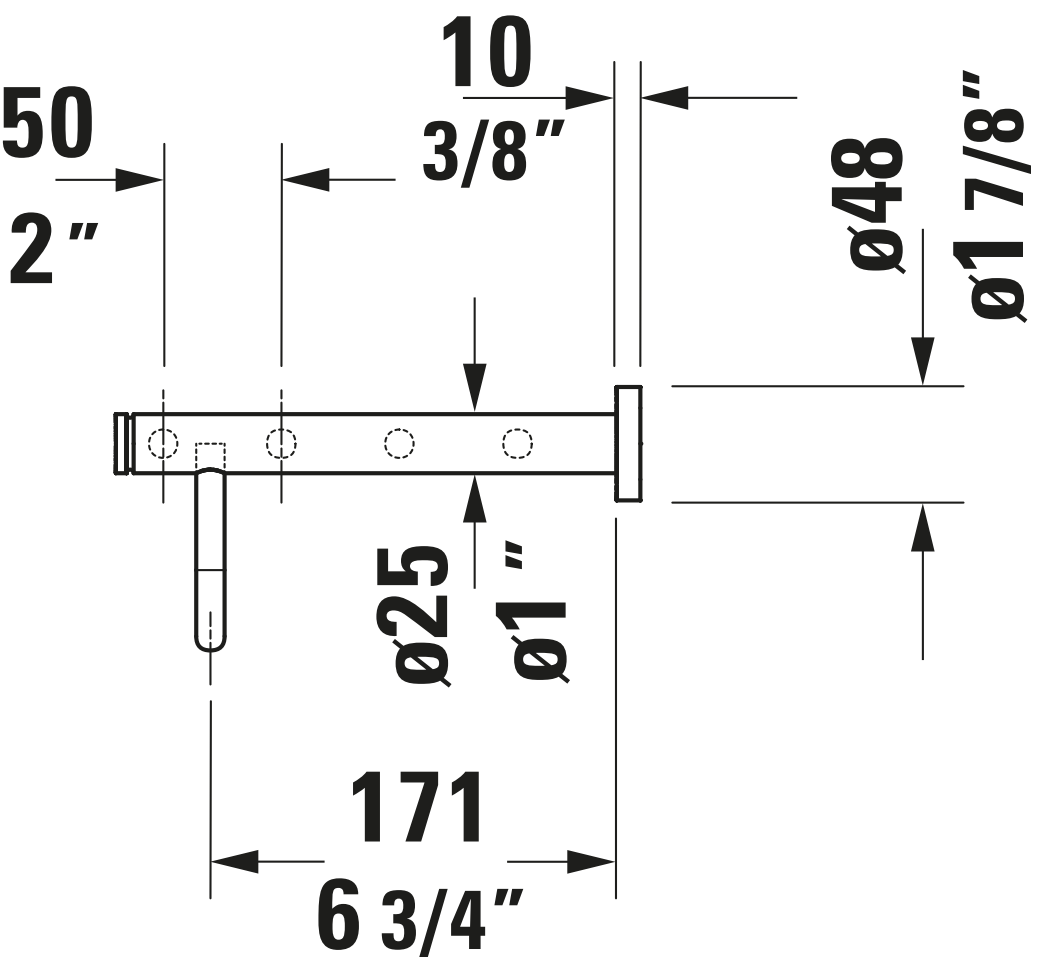
10
3/8"
50
2"
ø48
ø1 7/8"
ø25
ø1"
171
6 3/4"