Walraven Stainless Steel Thread Adaptor

(M9015)

adjustment of thread connection

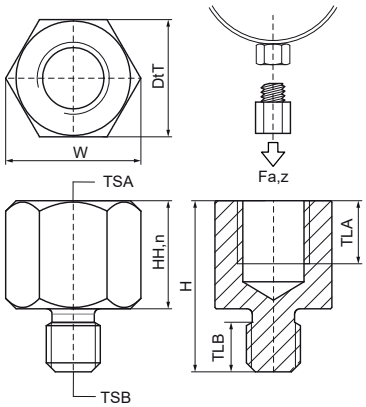

Features & benefits

- only tension loads recommended
- to enlarge or reduce the thread size in the connection of clamps, etc.
- material: stainless steel A4 (1.4401/ AISI 316)

Product Number	NRF Number	Thread Size A	Thread Length A	Thread Size B	Thread Length B	Nominal Head Height	Width Across Flats	Total Height	Total Width	Total Depth	Maximum Allowed Load Faz
Reference Letter		*TSA*	*TLA*	*TSB*	*TLB*	*HH,n*	*WAF*	*H*	*W*	*DtT*	*Fa,z*
Unit description			*mm*		*mm*	*mm*	*mm*	*mm*	*mm*	*mm*	*N*
6477210	1389687	M10	9	M8	6	15	13	23	15	13	6,500
6477308	1389684	M8	7	M10	6	13	13	21	15	13	6,500