ENSTALL

ESDEC

ClickFit EVO Slate roof Manual

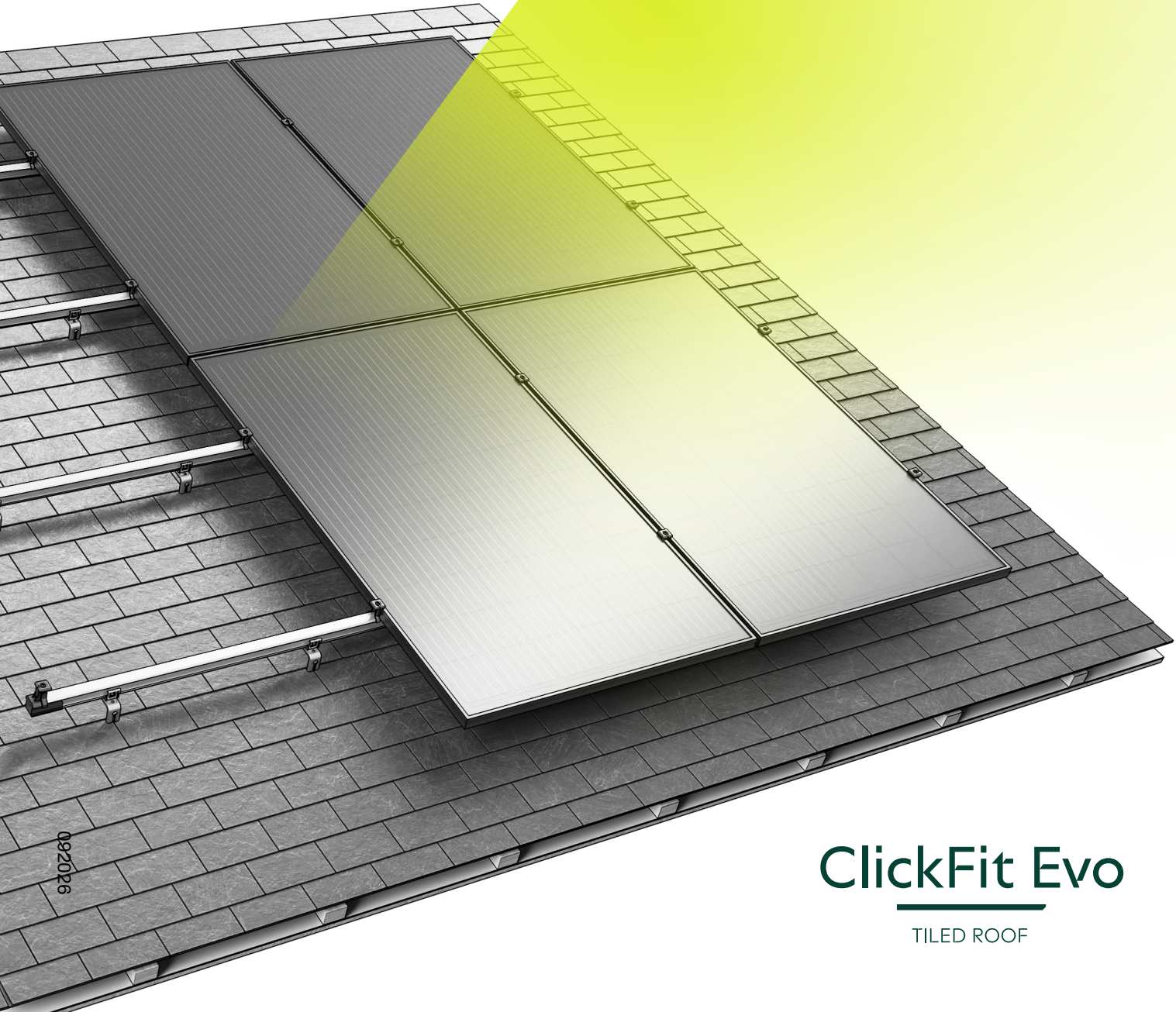

092026

ClickFit Evo

TILED ROOF

TABLE OF CONTENTS

Introduction 3

About this document 3
Other relevant documents 3
Earthing and bonding 3
Symbols used in this manual 3

Warranty and liability 4

Warranty 4
Maintenance 4
Liability 4

Product information 4

Intended use 4
Improper use 4
Compatible solar panel flange dimensions 4
Specifications 5

System and application 6

Components 6

Safety 7

Personal protective equipment 7
Safety warnings and regulations 7

Installation 8

1. Preparation 8
Tightening torques 9
2. Preparing and sizing mounting rails 12
3. Install the slate roof hooks 14
Situation A: on two battens, using the middle hole 16
Situation B: on two battens, using the lower hole 16
Situation C: On one batten and a timber shim 17
Situation D: On Solid wood boards / concrete 17
4. Attaching the mounting rails 19
5. Optional: Attaching the MLPE clips 22
ClickFit EVO MLPE Clip Light Weight 22
ClickFit EVO MLPE Clip Heavy Weight 23
6. Mounting solar panels with 60mm panel clamps 24
Mounting the first panel 24
Mounting the following panels 26
Mounting the last panel 27
7. Mounting the solar panels with 35 mm panel clamps 30
Mounting the first panel 30
Mounting the following panels 33
Mounting the last panel 35
8. Mounting multiple rows 37

Removal and recycling 37

General 37

INTRODUCTION

ABOUT THIS DOCUMENT

In this manual you will find the installation instructions for the ClickFit EVO mounting system for solar panels on slate roofs.
The system is suitable for mounting solar panels in portrait and landscape orientation.
These instructions are addressed at qualified technical personnel.
Always refer to eu.enstall.com for the latest version of this manual.

OTHER RELEVANT DOCUMENTS

When installing the ClickFit EVO mounting system, you will need the following documents:

- The project plan, which you can create in the calculator at https://eu.enstall.com/en/calculator.
- The installation manuals for the solar panels, inverters and any other components.

During the installation of the mounting system, it is important to adhere to the installation manual, the installation manual of the components, and the accompanying standards to prevent accidents. Pay special attention to (local) standards, regulations and legislation (among others):

- Local Building Regulations (latest version)
- Health and Safety at Work etc Act 1974
- Health and Safety in Roof work - HSE
- Eurocodes 0 (EN 1990 - Structural Design)
- Eurocodes 1 (EN 1991 - (Influences on structures)
- HD-IEC 60364 series - Electrical installations for low voltage
- EN-IEC 62305-2 - Protection lightning - Risk Management
- MIS 3002 – The solar PV standard
- MCS012 - Product Certification Scheme Requirements: Pitched Roof Installation Kits
- MCS012 Issue 3.0 - The UK SolarMounting Standard

EARTHING AND BONDING

Our ClickFit EVO systems are VDE certified for corrosion and bonding. According to the electrical standard HD-IEC 60364 – chapter 712, functional bonding for inverter's isolation check is necessary.
In the Enstall ClickFit EVO Series, functional bonding is achieved by the EVO 35 mm and 60 mm module clamps, which provide the electrical connection between the module edge and the EVO rails. The final functional bonding connection is made by proper mounting of a separate bonding cable onto the EVO rail and an adequate bonding connection with the inverter or earthing contact.
For detailed instructions on grounding and bonding, consult the electrical standard HD-IEC 60364 and any local regulations. Please, follow the instructions of the inverter's manual. This operation needs to be done by a certified electrician.

SYMBOLS USED IN THIS MANUAL

	Warning!	Failure to follow this instruction could result in serious injury or major damage to the product.
	Caution!	Failure to follow this instruction could result in personal injury or damage to the product.
	Note	Emphasises an instruction.

WARRANTY AND LIABILITY

WARRANTY
The warranty is subject to the warranty terms and general terms & conditions of Enstall. These can be found on the eu.enstall.com website.

MAINTENANCE
Please refer to the maintenance checklist at https://eu.enstall.com/.

LIABILITY
The manufacturer accepts no liability for damage or injury caused by the failure to comply (strictly) with the safety guidelines and instructions in this manual, or by negligence during installation of the product and the accessories listed in this document.
Enstall reserves the right to change this document without notice.

PRODUCT INFORMATION

INTENDED USE
The ClickFit EVO mounting system is designed for mounting solar panels on slate roofs. With this mounting system, solar panels can be positioned on the roof either with the short side at the bottom (portrait) or with the long side at the bottom (landscape).

IMPROPER USE
The mounting system is not suitable for use on types of roof other than the one specified.

COMPATIBLE SOLAR PANEL FLANGE DIMENSIONS
The Clickfit EVO module clamps are suitable for solar panels with a frame height between 29 – 50 mm and a frame width of at least 10 mm, where a sufficient clamping force can be applied.
Check the documentation of the solar panel supplier if the intended solar panel can withstand the loads and clamping force.

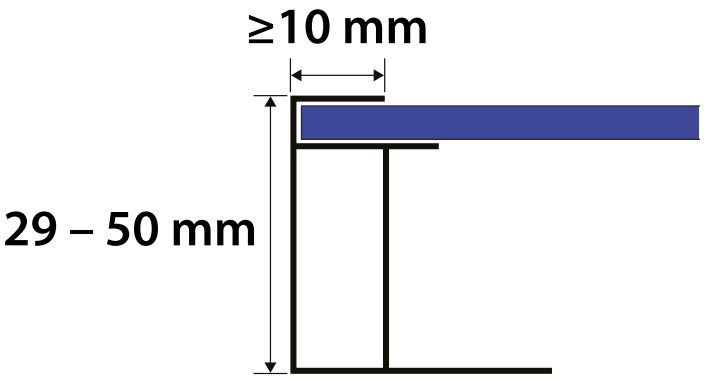

SPECIFICATIONS

Orientation of solar panels	Portrait and landscape
Frame height of solar panel [1)]	30 - 50mm
Maximum area of solar panels	2.6m²
Maximum field size [2)]	For horizontal and vertical rails: 15m per segment Longer segments require a dilatation gap of 125mm.
Roof material	Slates
Roof structure	Battens Solid wood boards Concrete
Roof pitch	5-60° ! At an inclination angle of <10°, the self-cleaning effect of the panel is affected.
Maximum roof height	i Subject to Eurocode guidelines and national additions. Use the calculator to calculate the possibilities of your project.
Edge zone	The edge zone is not a fixed distance and is indicated in the Enstall calculator. Within this zone, installation is permitted in certain cases, depending on the calculation.
No-go zone	30cm distance to the ridge, 30cm to the side of the roof and 30cm to the gutter.

[1)] Ensure that the module frame is compatible with the ClickFit EVO clamps before installation.

[2)] Always consider the right measures related to fire spread and compartmentalization. This might influence the modules segment size.

! Enter the data in the calculator, so you are sure of choosing the right system for the terrain category, snow loads and wind zone that applies to your project.

i Depending on the roof and the result obtained from the calculator, you can lay several segments with solar panels next to each other. Always leave a minimum of 12mm of space between segments to allow for expansion of the roof.

i If your project has different specifications than these, please contact Enstall.

SYSTEM AND APPLICATION

COMPONENTS

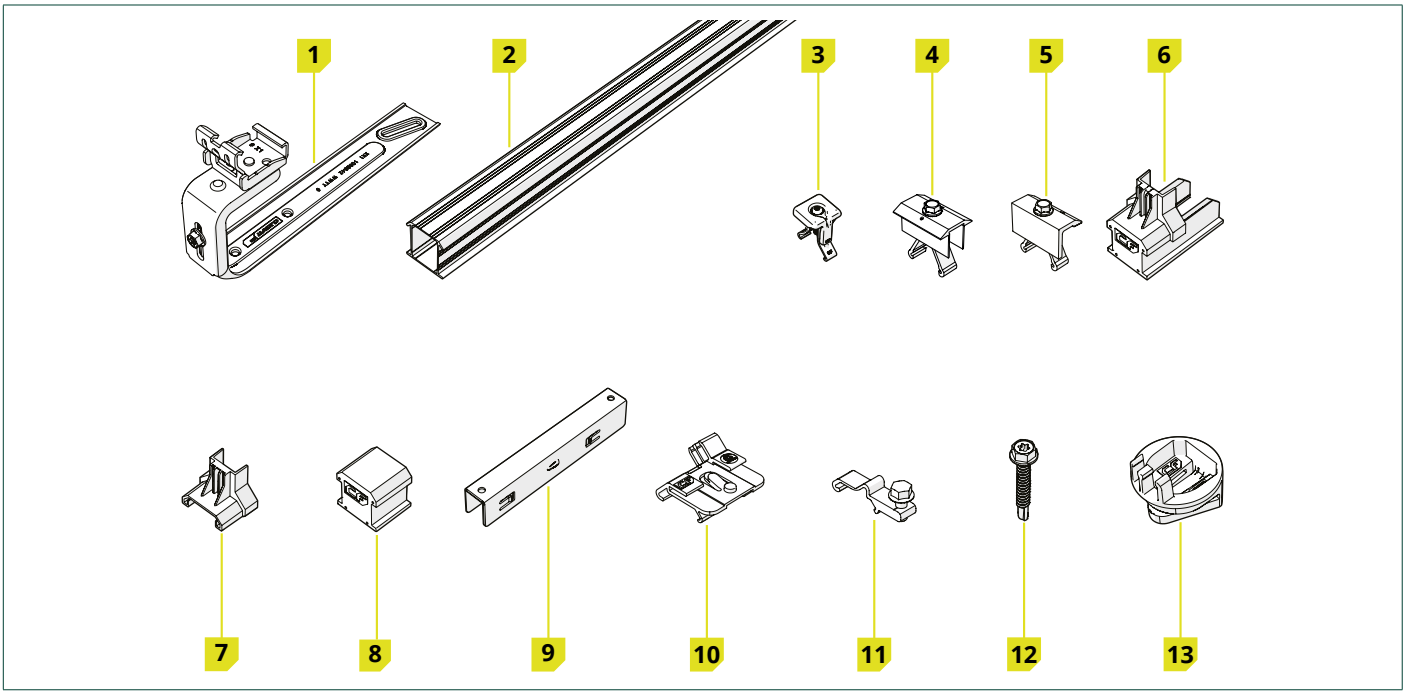

Component		Article number
1	ClickFit EVO Slate roof hook	1008042
2	ClickFit EVO Mounting Rail	10081_ _
3	ClickFit EVO Module Clamp universal	1008020(-B)
4	ClickFit EVO 60 Mid Clamp Black	1008021-B
5	ClickFit EVO 60 End Clamp Black	1008022-B
6	ClickFit EVO Mounting Rail End Cap	1008060(-B)
7	ClickFit EVO End Clamp Support	1008065(-B)
8	ClickFit EVO End Cap without end clamp support	1008066(-B)

Accessory		Article number
9	ClickFit EVO Mounting Rail Coupler	1008061
10	ClickFit EVO MLPE Clip Light Weight	1008067
11	ClickFit EVO MLPE Clip Heavy Weight	1008068
12	ClickFit EVO Self-drilling screw 6,3x42mm SW10/T30	1003016
13	ClickFit EVO mounting set	1008064

Check that the correct components are present in the required numbers according to the project plan generated by the calculator.

SAFETY

PERSONAL PROTECTIVE EQUIPMENT

	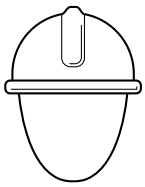				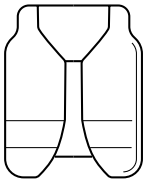	
Hearing protection	Safety helmet	Safety glasses	Face masks	Safety gloves	Safety clothing	Safety shoes

SAFETY WARNINGS AND REGULATIONS

Warning!

- Installation work should always be carried out by at least two skilled people.
- Do not use components from other mounting systems.
- Do not leave out parts.
- Always work according to the current regulations for working on roofs.
- Do not perform the installation in strong winds, or when the roof is slippery or wet.
- Always work on the roof with fall protection and, if necessary, with safety nets and edge protection.
- Never stand on or in the gutter.
- Always use a lifting aid or hoisting device when moving heavy equipment.
- Always place ladders on a strong, stable surface.

Caution!

- Walk as little as possible on the roof. Use an aerial platform, ladder or other solution.
- Never walk on the system or on the solar panels.

INSTALLATION

1. Preparation

To ensure the safe and efficient installation of PV systems on slate roofs, the work should be carried out by professional slate roofers. Before undertaking any work on the roof, a thorough inspection must be conducted to assess the roof condition.

1	Inspect the roof.
☐	The roof is in good condition.
☐	The roof construction has sufficient bearing capacity to support the installation, taking into account wind and snow loads.

2	Check the project plan and components.
☐	Check the project plan. Is there no project plan? Then create one in the online calculator before starting installation.
☐	Check that all components are present (page 5).
☐	Determine the position of the slate roof hooks. Use the battens or trusses if present.

3	Make sure all the required tools are at hand.

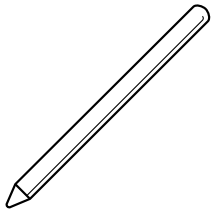	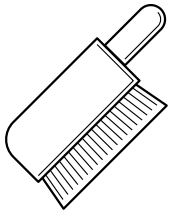	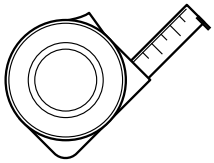	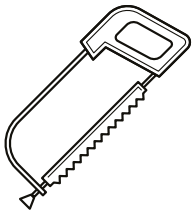	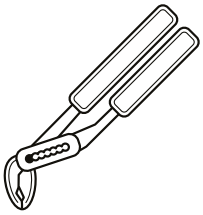
Marker or chalk	Brush	Tape measure	Hacksaw	Water pump pliers
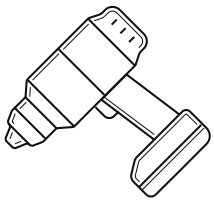	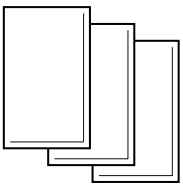	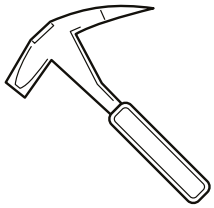	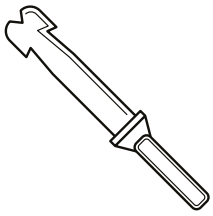	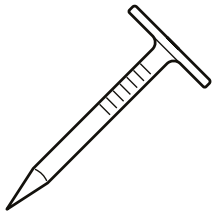
Cordless screwdriver	Spare slate tiles	Slate roofing hammer	Roofing nail setter	Slate roofing nails
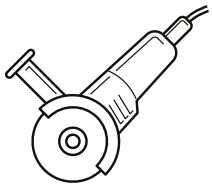	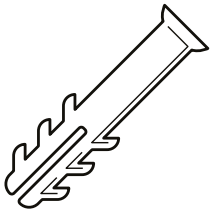	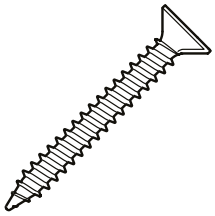		
Angle grinder	Plugs [1]	Ø 6mm countersunk head screws [2]	Waterproofing material	Timber shims

[1] only for installation on concrete constructions.

[2] The selection of screws should be based on the specific underroof construction. To ensure proper installation and compatibility with the slate roof hooks, we recommend using screws with the following specifications:

Diameter	Ø 6mm
Effective length	≥ 36mm
Head type	Countersunk Torx T30 [3)]
Material	ZnNi coated or stainless-steel grade A2 Do not use galvanised screws

[3)] Countersunk screws are recommended to avoid any interference with the proper installation of the upper slate tile.

TIGHTENING TORQUES

Always use a torque wrench. Make sure that the bit is correctly and completely inserted in the screw head when tightening, in view of the high tightening torque.

Screw	Tightening torque
ClickFit EVO Module Clamp universal	4.5 Nm
ClickFit EVO Mounting Rail Clicker (height adjustment)	9 Nm
Mounting screw for vertical rail	1 Nm
ClickFit EVO MLPE Clip Heavy Weight	8-12 Nm
ClickFit EVO 60 End Clamp Black	16.5 Nm
ClickFit EVO 60 Mid Clamp Black	16.5 Nm

4 Clean and tidy the roof.

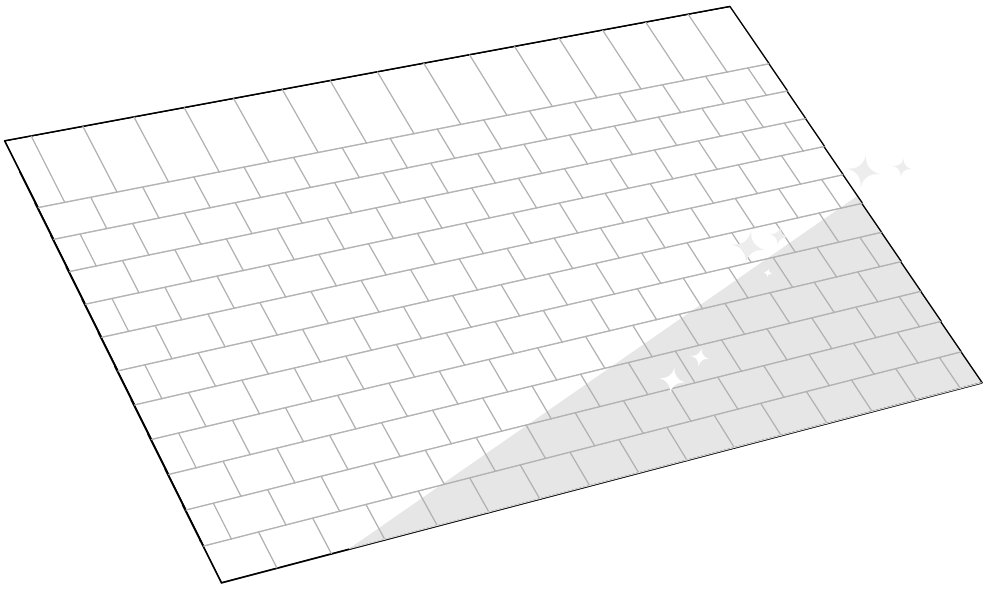

5 Determine the position of the solar panels on the roof

Consider the (local) fire regulations for photovoltaic installations. To mitigate the risk of fire spread, the fire compartments of the object must be respected. The PV system should not be placed over fire partition walls and a minimum distance of 30 cm must be kept. Likewise, it is wise to keep space in relation to skylights, lighting globes, corners and potential fire hazards.

Develop a project plan using the Enstall calculator and adhere to its guidelines. Access the calculator at calculator.eu.enstall.com.

The distance from the edge of solar panels to both the ridge and the gutter must be at least 30cm.

The distance from the solar panels to the side of the roof must be at least 30cm.

Take into account sunlight and shade over the whole year. If necessary, use a power optimizer or micro inverter to get the most out of your installation.

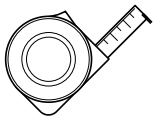

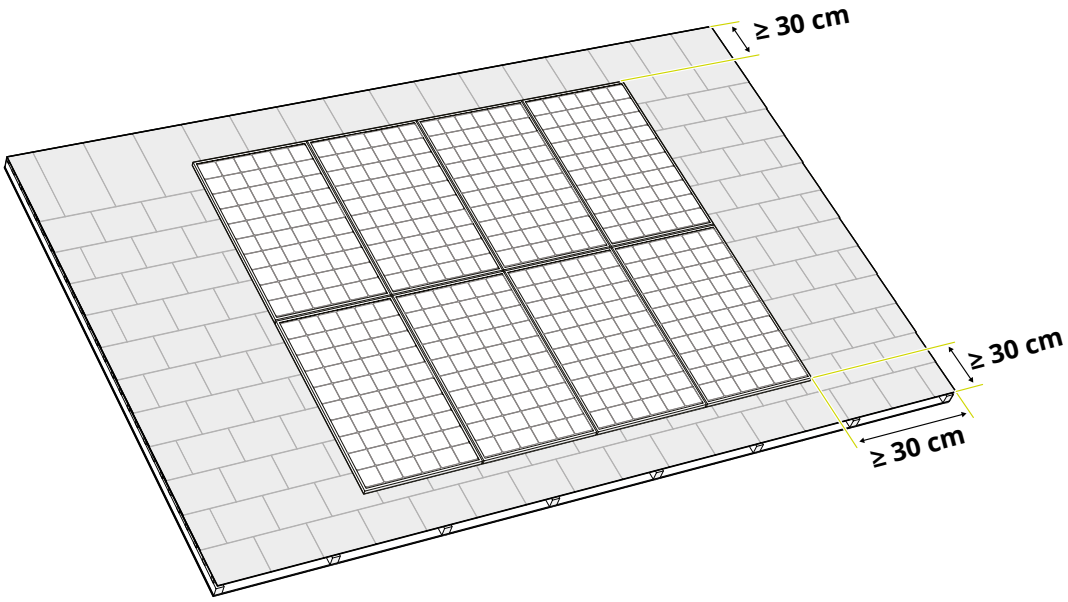

6 Draw the lines and end points for the mounting rails

When needed, rail spacing can be extended to the previous or next tile, crest or seam, up to 400 mm beyond the recommended distance. Enstall recommends to always respect the module manufacturers' rail spacing and clamping specifications.

Rail lengths can be found in the project plan.

For mounting in landscape orientation, the mounting rails should be placed at around ¼ of the short sides of the panel.
For mounting in portrait orientation, the mounting rails should be placed at around ¼ of the long sides of the panel.

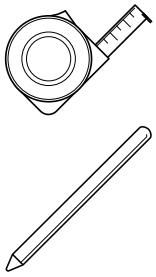

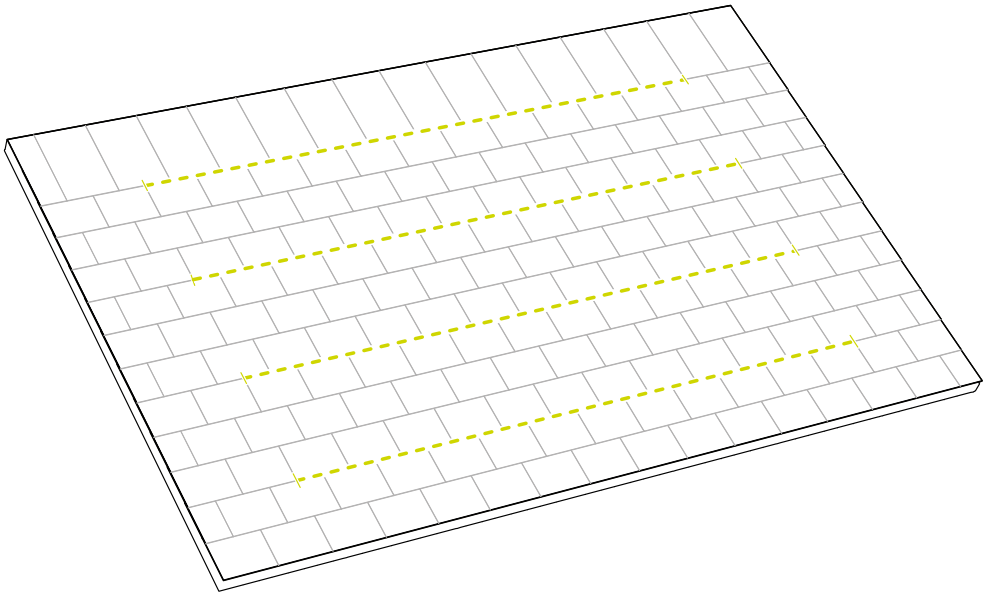

7 Mark the position of the slate roof hooks

Consult the project plan to determine the position of the slate roof hooks for your project.

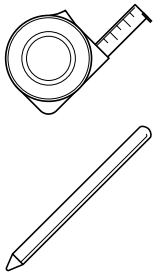

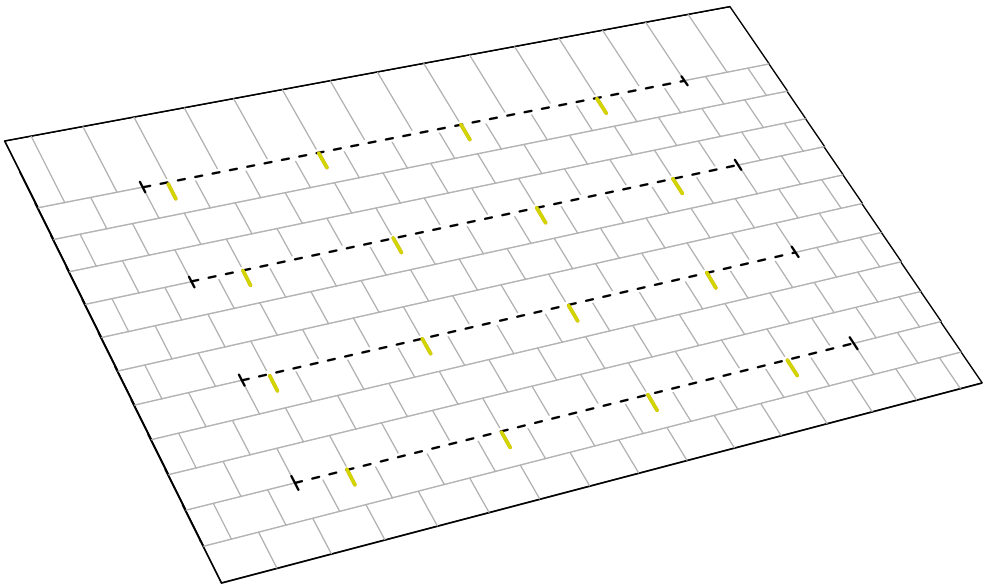

2. Preparing and sizing mounting rails

1 Consult the project plan for the overall layout of the solar panel segments.
2 Calculate the full length of the solar panel layout, accounting for gaps and/or spacing.
3 Calculate the necessary mounting rail extensions and adjustments.

Measure the solar panels and add 12mm between each solar panel for the universal module clamp (20mm for the ClickFit EVO 60mm clamp). Add 20-35mm on each side for mounting the end clamp and end cap (50-70mm for the ClickFit EVO 60mm clamp).

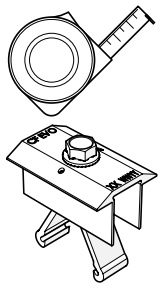

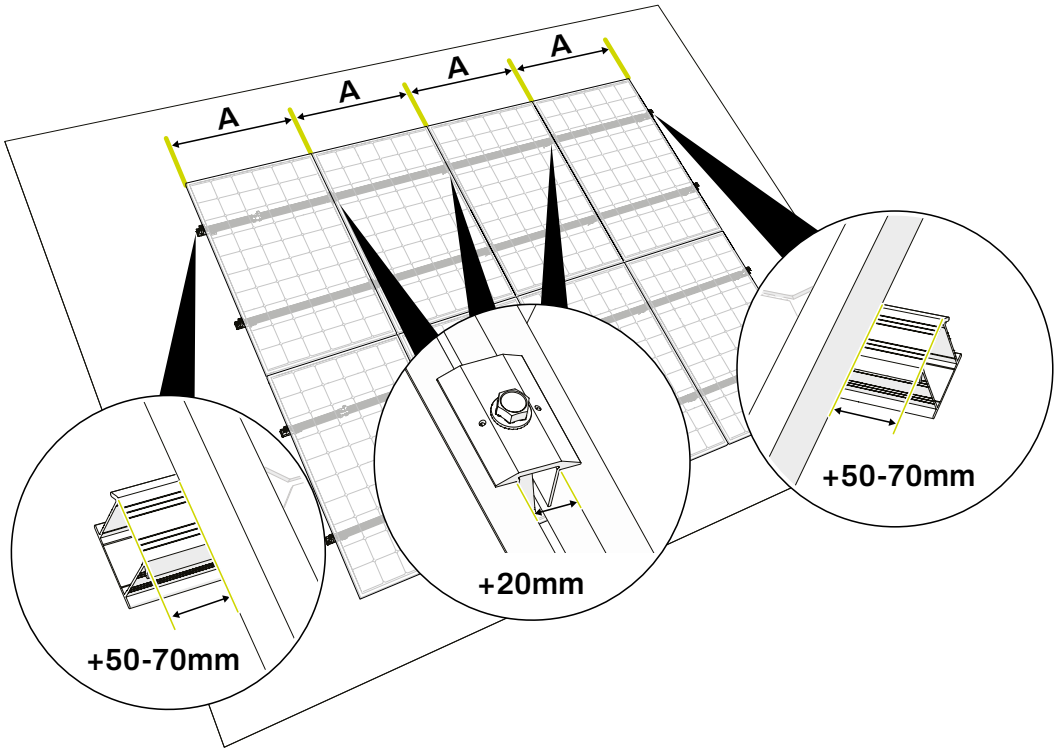

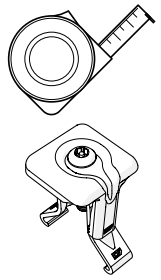

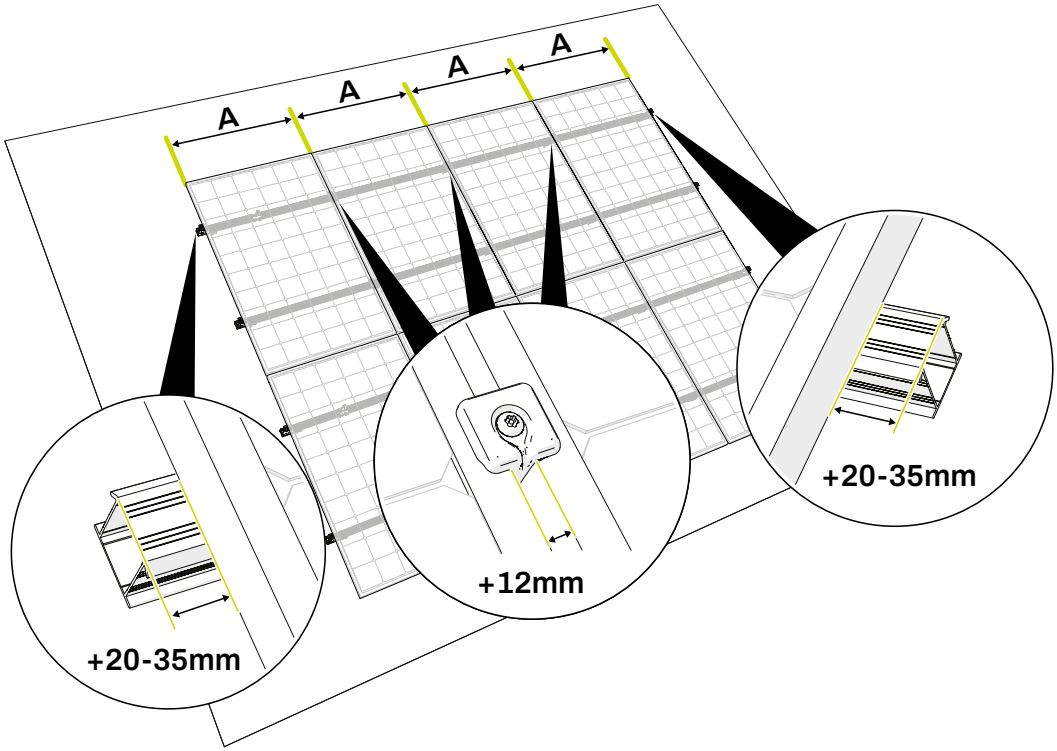

4 Use couplers to connect the mounting rails, if necessary

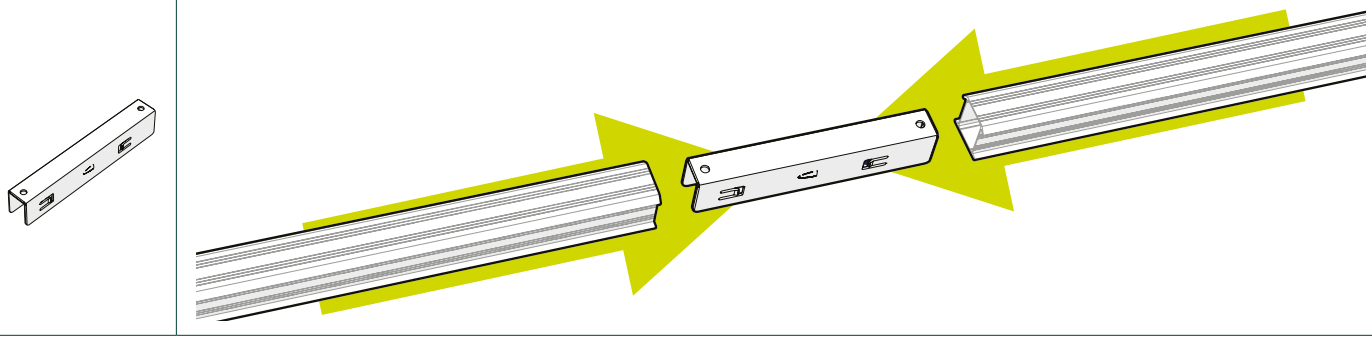

5 If the overhang is greater than 350mm: extend the mounting rail to the next rafter or batten.
6 Cut the mounting rails to size.

a. If the calculated overhang is less than 350mm beyond the marked position of the last slate roof hook, keep 20-35mm rail length overhang for mounting the end cap (art. no. 1008066(-B)) (>40mm for the ClickFit EVO 60mm clamp).

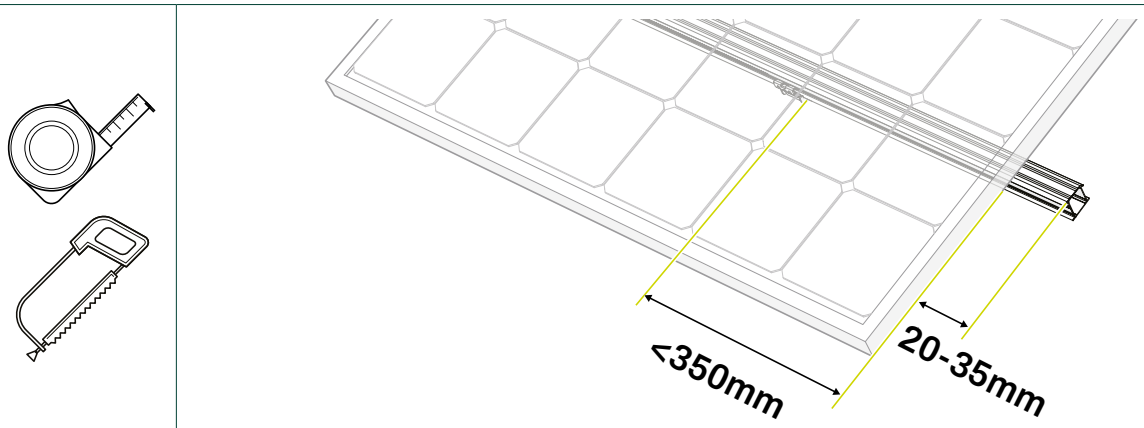

b. If the calculated overhang of the solar panel is **more** than 350mm beyond the marked position of the last slate roof hook, mark the position of an extra slate roof hook on the nearest rafter or batten. Extend the mounting rail to 50mm beyond the extra slate roof hook.

The additional 50 mm extension allows for proper fitting of an end cap (art. no. 1008066(-B)) to the mounting rails.

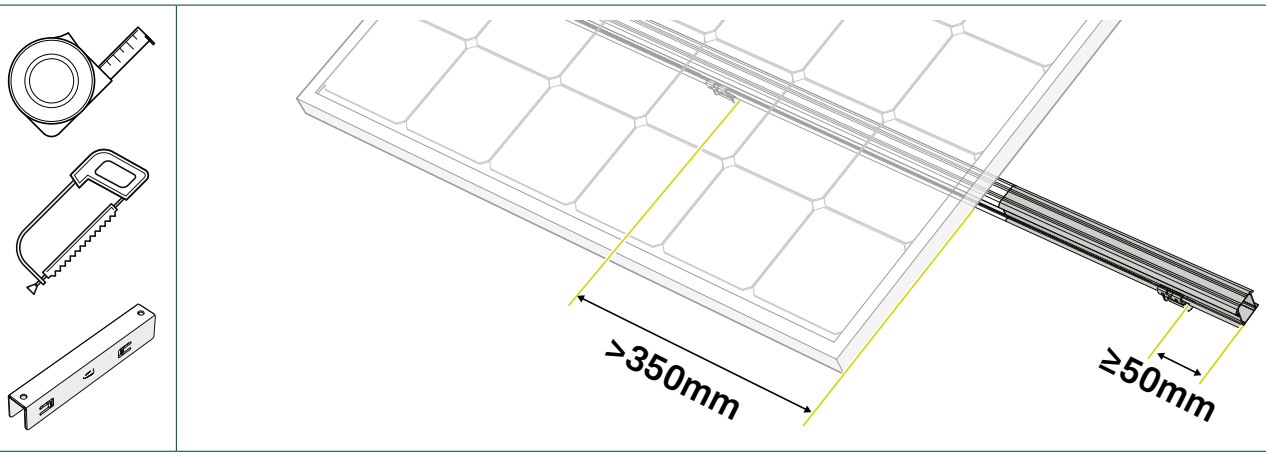

3. Install the slate roof hooks

1 Identify the slate that needs to be cut for the slate roof hook.

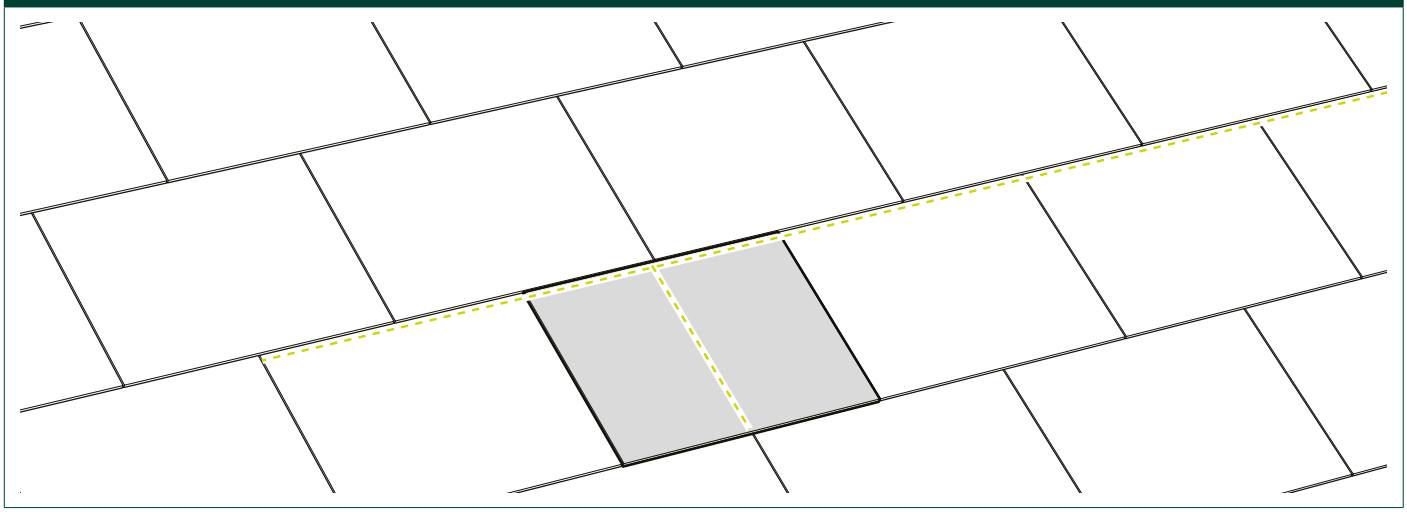

2 Remove any overlapping slate tiles.

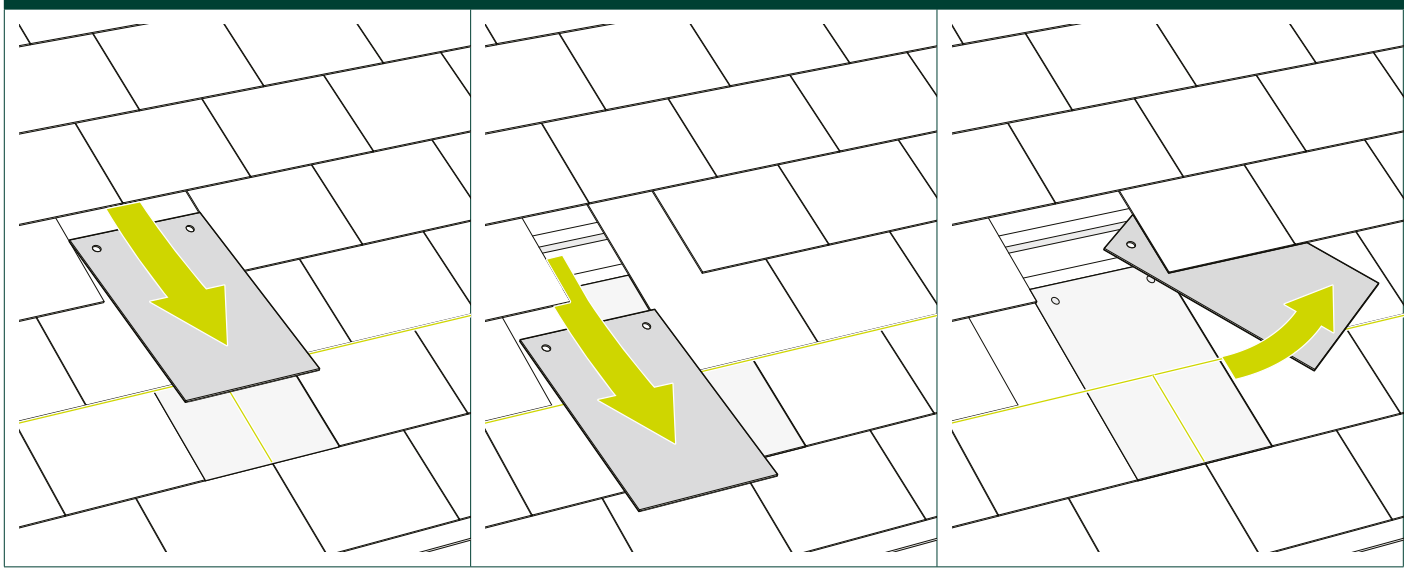

3 Place the roof hook on the marked location and mark the hole to be cut.

Position the slate roof hook so it does not interfere with the overlapping slates.

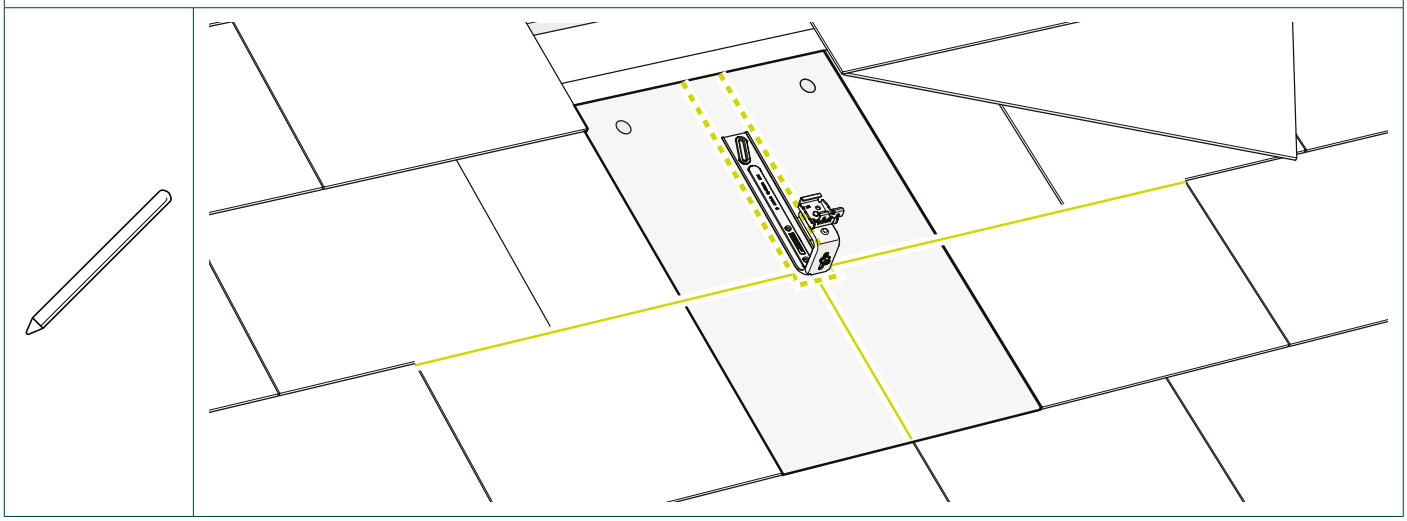

4 Make a cut-out.

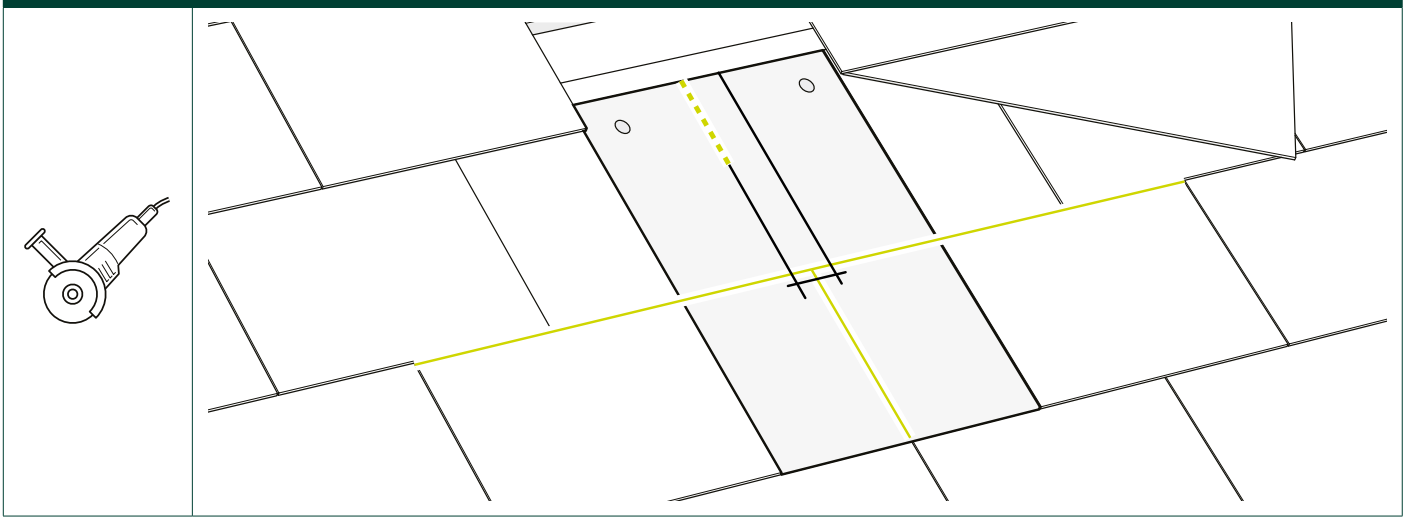

5 Place the roof hook in the cut-out and check what situation is appliccable for your construction.

Prior to installing the hooks, carefully consider the waterproofing method to be utilized. This may involve incorporating a lead sheet or a similar waterproofing material.

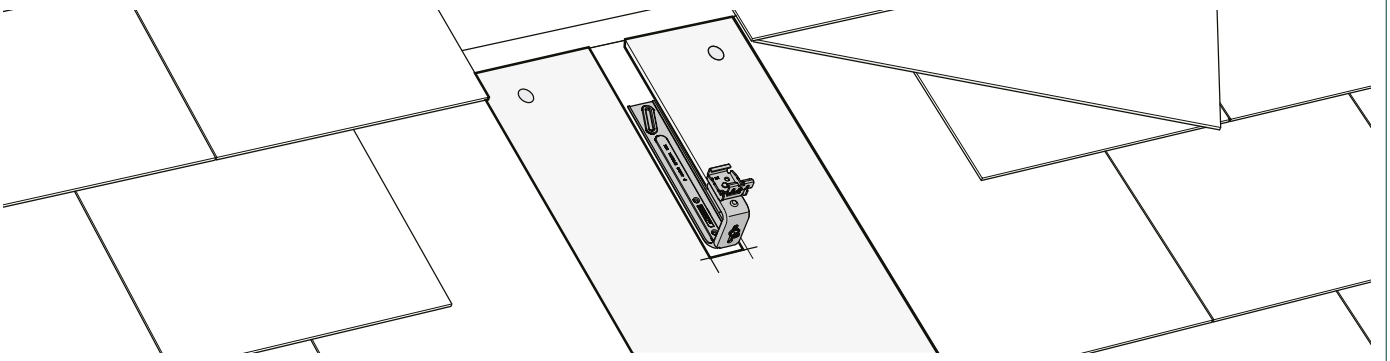

SITUATION A	SITUATION B	SITUATION C	SITUATION D
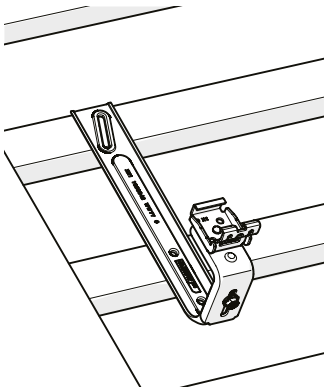	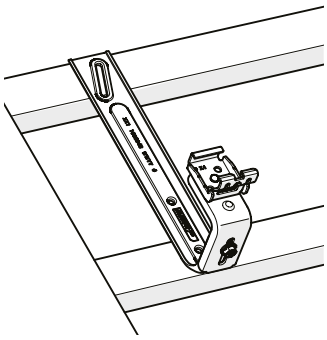	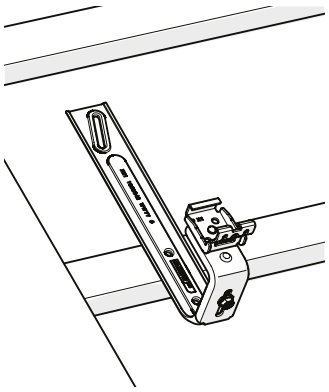	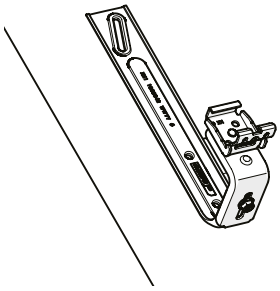

SITUATION A: ON TWO BATTENS, USING THE MIDDLE HOLE

1. Position the slate roof hook so it does not interfere with the overlapping slates.
2. Mount the slate roof hook to the battens using two Ø6 mm countersunk head screws through the slotted and centre hole.

Make sure to position the upper screw as close to the middle of the batten as possible.

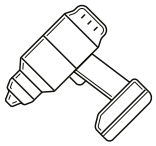

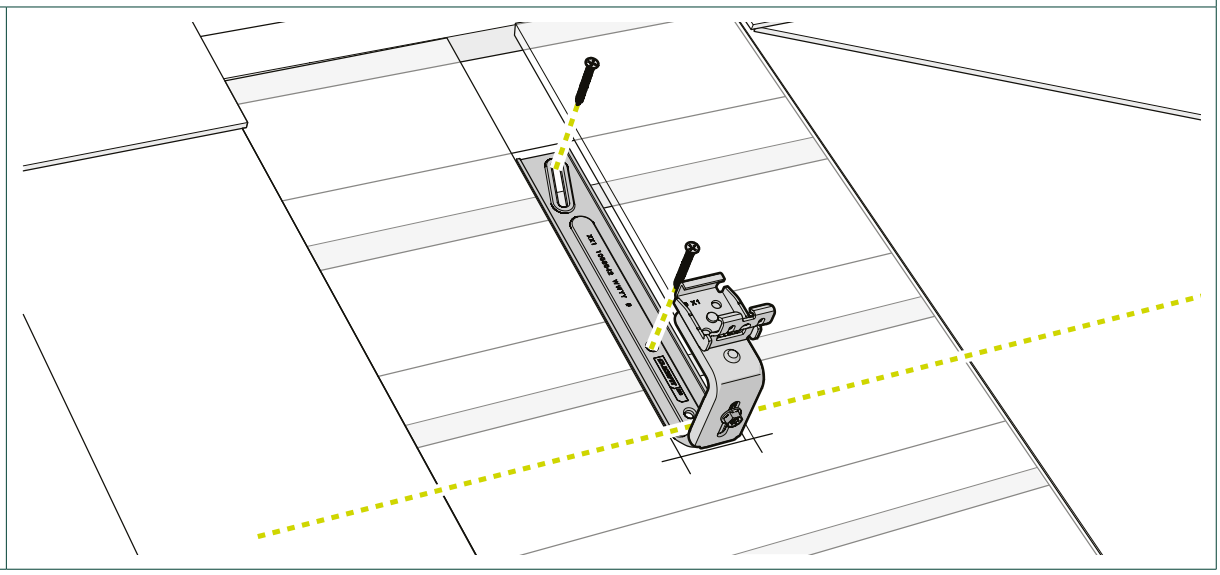

Continue to step 3.6.

SITUATION B: ON TWO BATTENS, USING THE LOWER HOLE

1. Loosen the Alignment bracket screw using a Torx TX30 drill bit or an H10 wrench.
2. Rotate the alignment bracket sideways to allow access to the lower hole.
3. Position the slate roof hook so it does not interfere with the overlapping slates.
4. Mount the slate roof hook to the battens using two Ø6 mm countersunk head screws through the slotted and bottom hole.
5. Rotate and secure the alignment bracket back upright on the slate roof hook. Apply a torque of 9 Nm.

In this situation, the alignment bracket of the slate roof hook must be rotated aside for mounting.

Make sure to position the upper screw as close to the middle of the batten as possible.

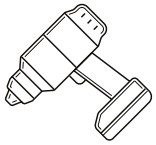

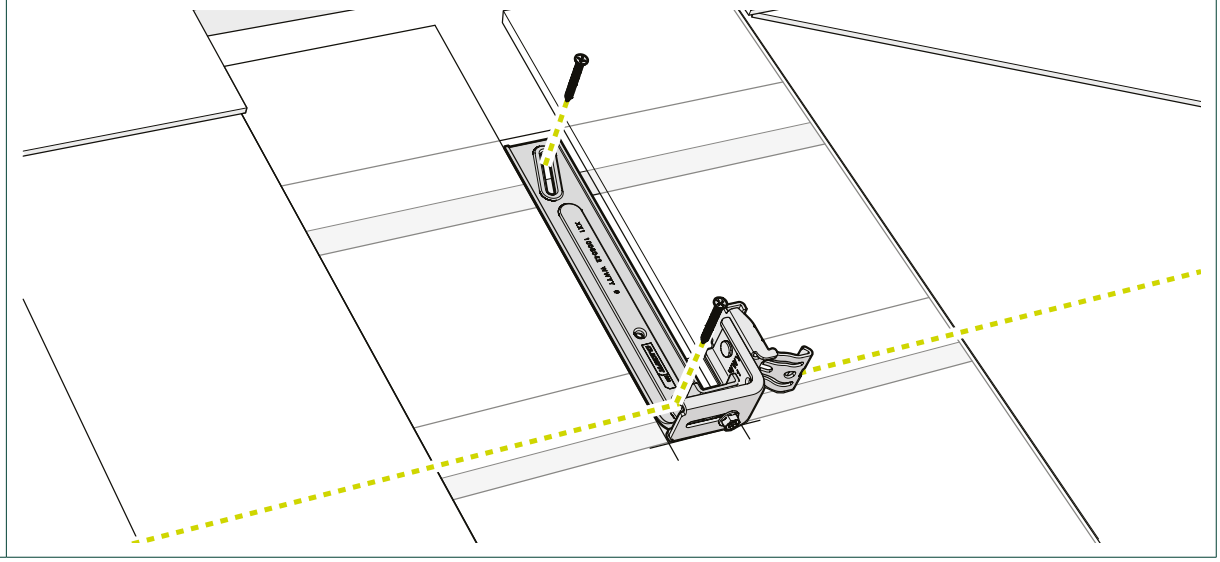

Continue to step 3.6.

SITUATION C: ON ONE BATTEN AND A TIMBER SHIM

1 Position the slate roof hook so it does not interfere with the overlapping slates.
2 Place a shim underneath the slotted hole of the slate roof hook (not included).
3 Mount the slate roof hook to the batten and shim using two Ø6 mm countersunk head screws through the slotted and centre hole.

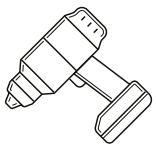

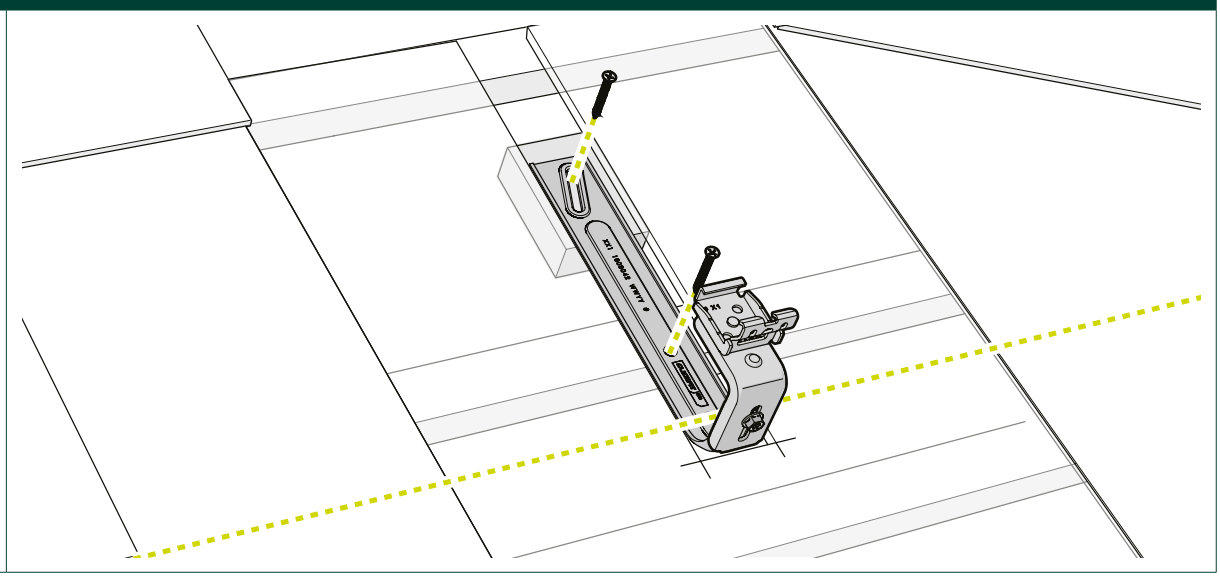

Continue to step 3.6.

SITUATION D: ON SOLID WOOD BOARDS / CONCRETE

For solid wood boards:
1 Make sure the screws are not positioned along the same wood grain to prevent the wood from splitting.
For concrete substructure:
1 Predrill the holes in the roof and insert the appropriate plugs (not included).
2 Use a chemical anchor to fix the screw. Consult the instructions from the supplier of the chemical anchor before starting.

! Clear the drill hole and surrounding area of drill cuttings.

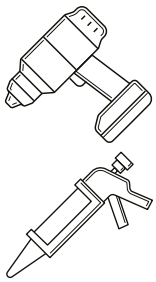

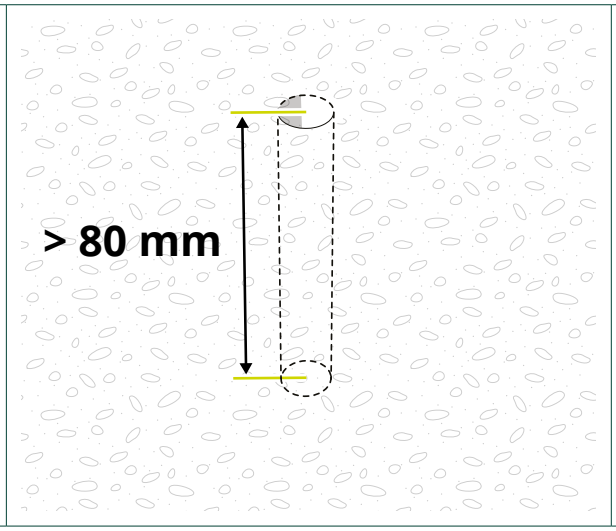

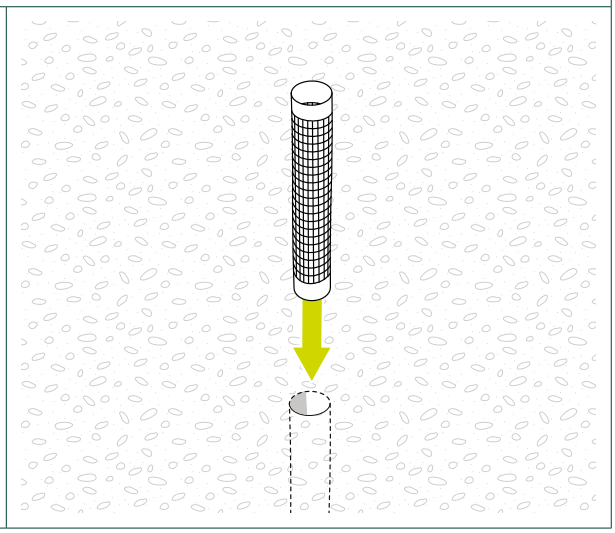

3 Mount the slate roof hook to the construction using two Ø6 mm countersunk head screws through the slotted and centre hole.

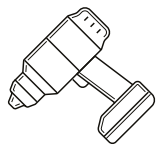

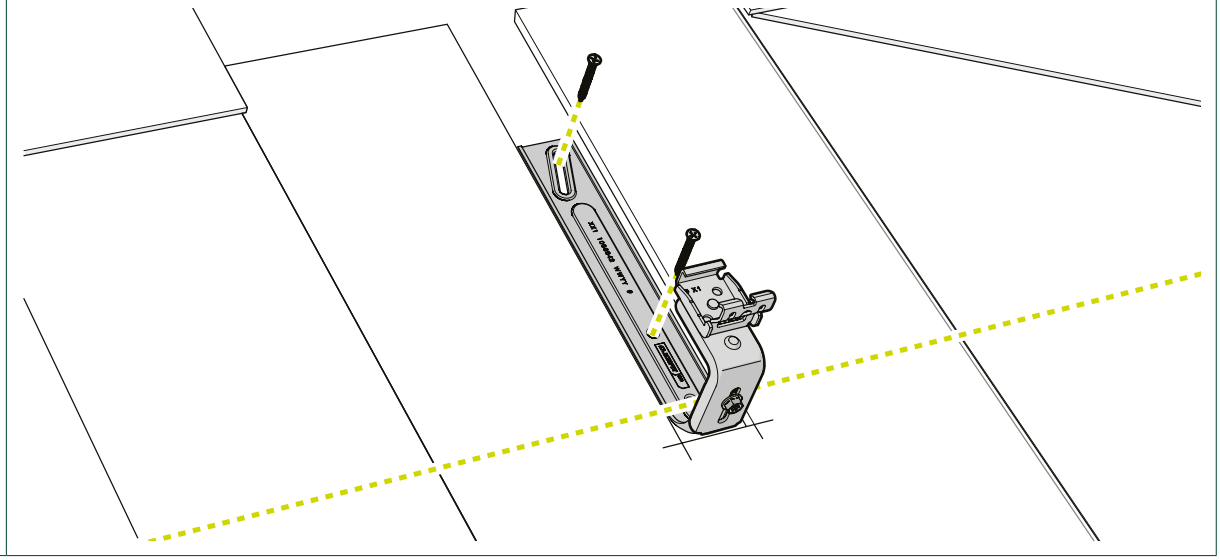

Continue to step 3.6.

6 Replace the overlapping slate tiles.

Before replacing the overlapping slate tiles, carefully consider the waterproofing method to be employed. This may involve using a lead sheet or a similar waterproofing material.

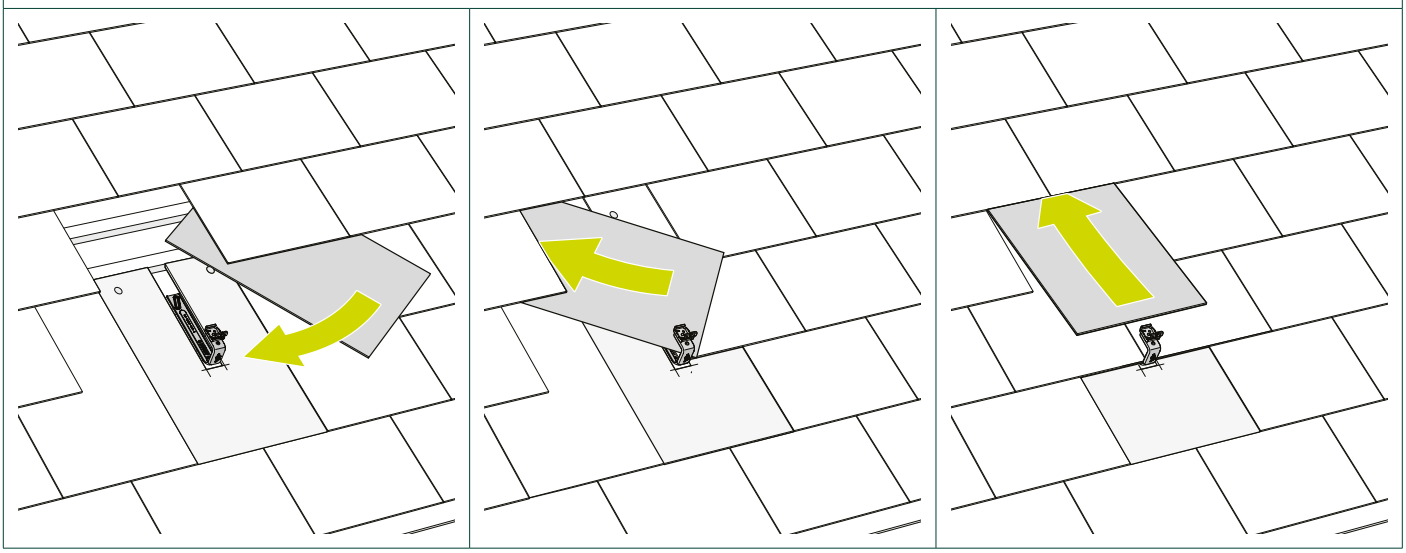

Repeat the steps in this chapter for all slate roof hooks.

4. Attaching the mounting rails

1 Rotate the click connections into the correct orientation.

For horizontal rail orientation, make sure that the cable tray of the click connections is always pointing downwards.

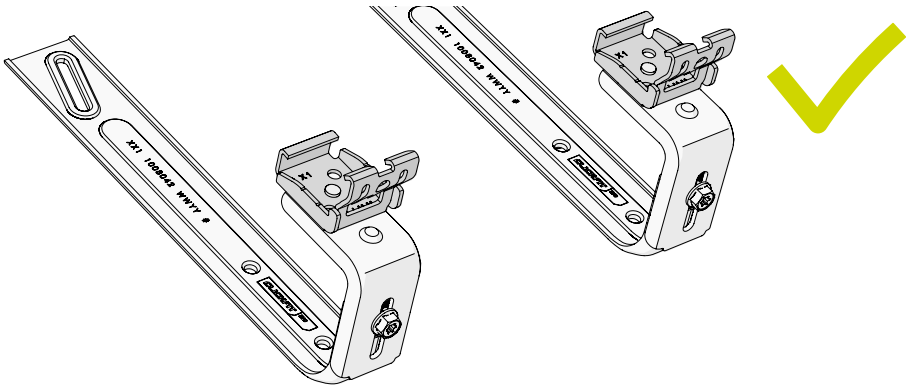

For vertical rail orientation, ensure that the click connections are all pointing in the same direction.

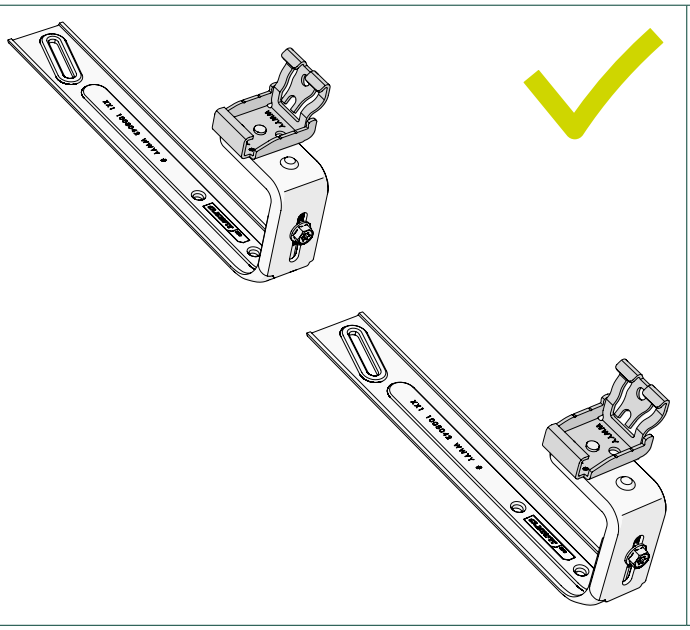

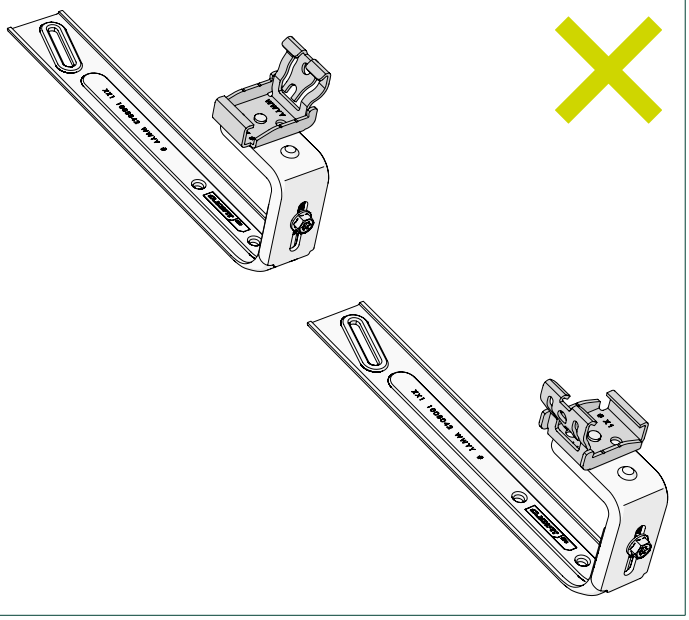

Situational: Loosen the alignment bracket screw using a Torx TX30 drill bit or an H10 wrench to adjust the height of the slate roof hook.

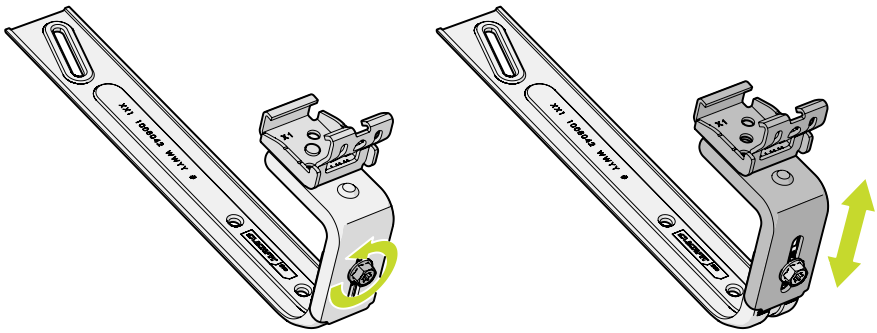

2 Place the mounting rail in the click connection and twist until it clicks into place.

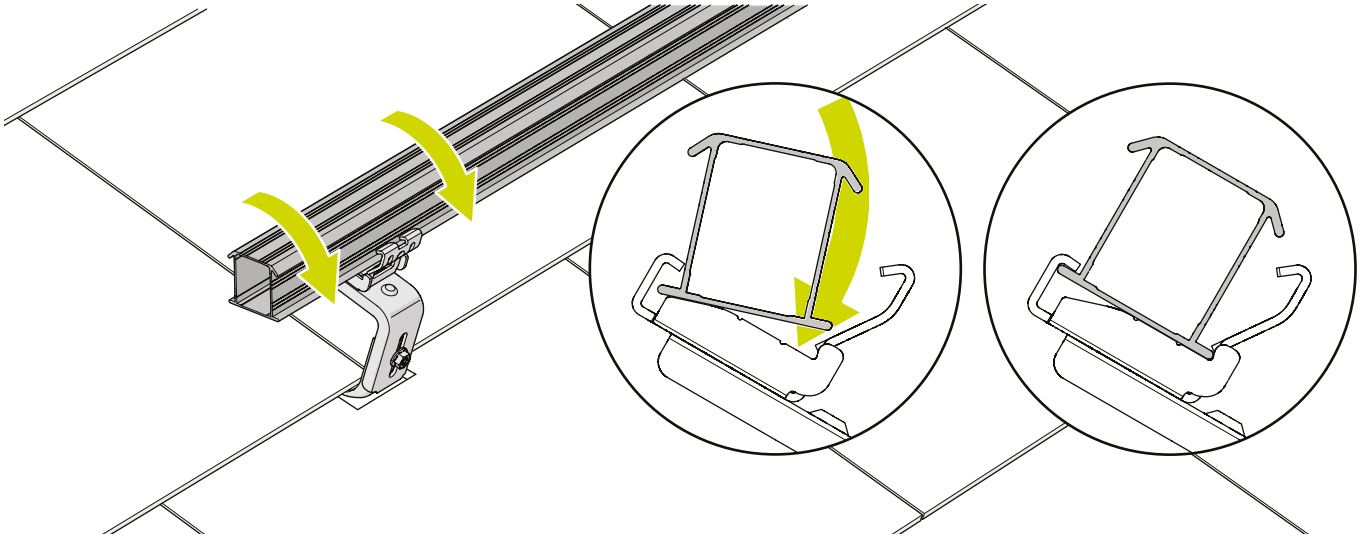

3 For uneven roofs: Loosen the screws of any misaligned brackets. The rigidity of the rail automatically aligns the brackets into the correct position.

4 Retighten the loosened screws when the rail is properly aligned. Apply a Torque of 9 Nm.

The mounting rails need to be straight and parallel for proper installation and alignment of the solar panels.

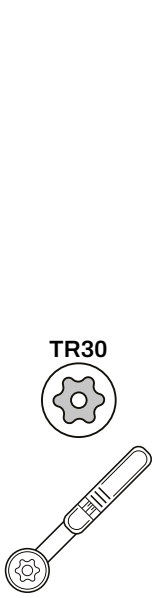

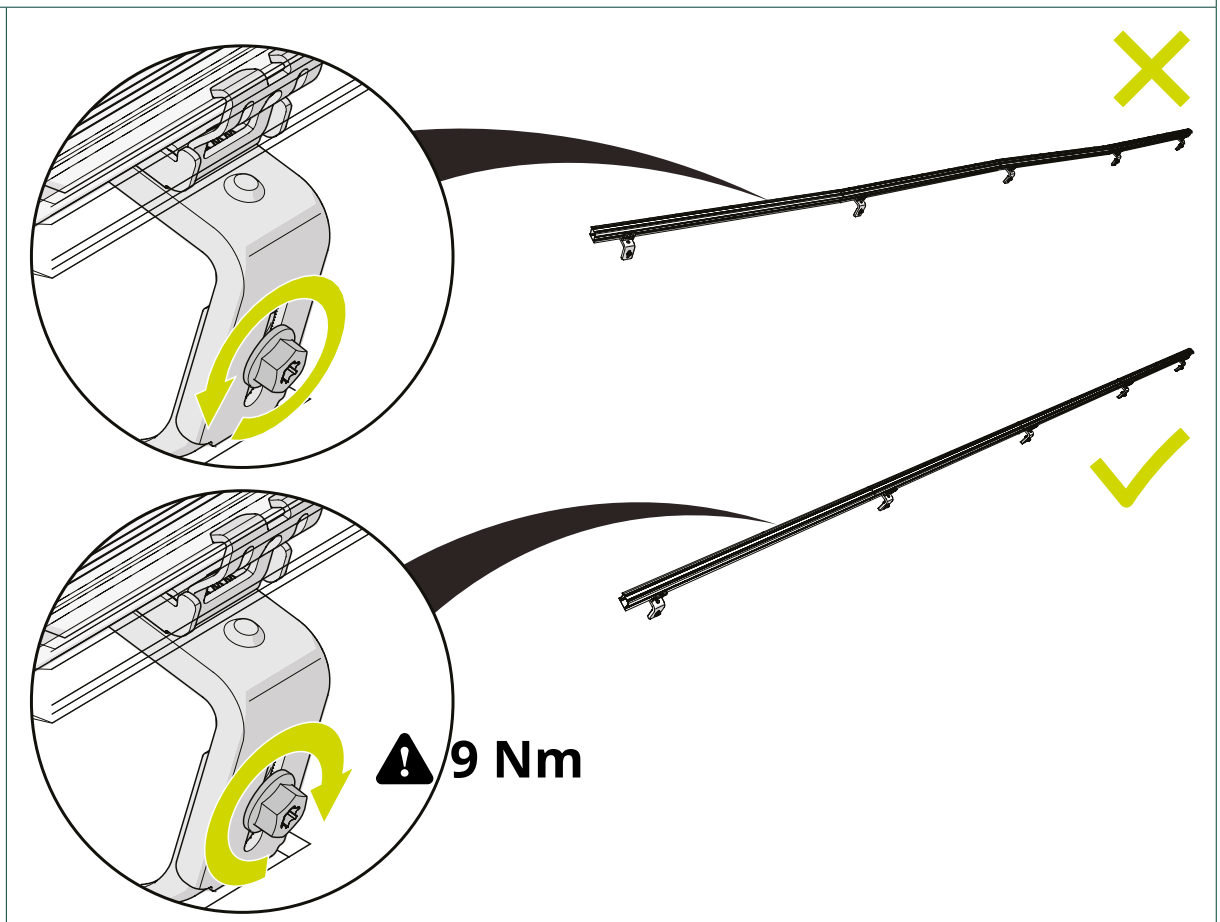

5 For vertical mounting: Secure the mounting rails to the click connections

First secure the bottom click connection with a self-drilling screw. Skip two click connections and then screw down the fourth click connection. Repeat until the top click connection.

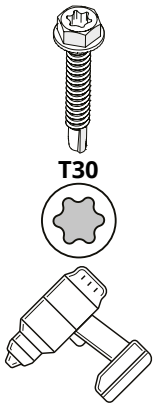

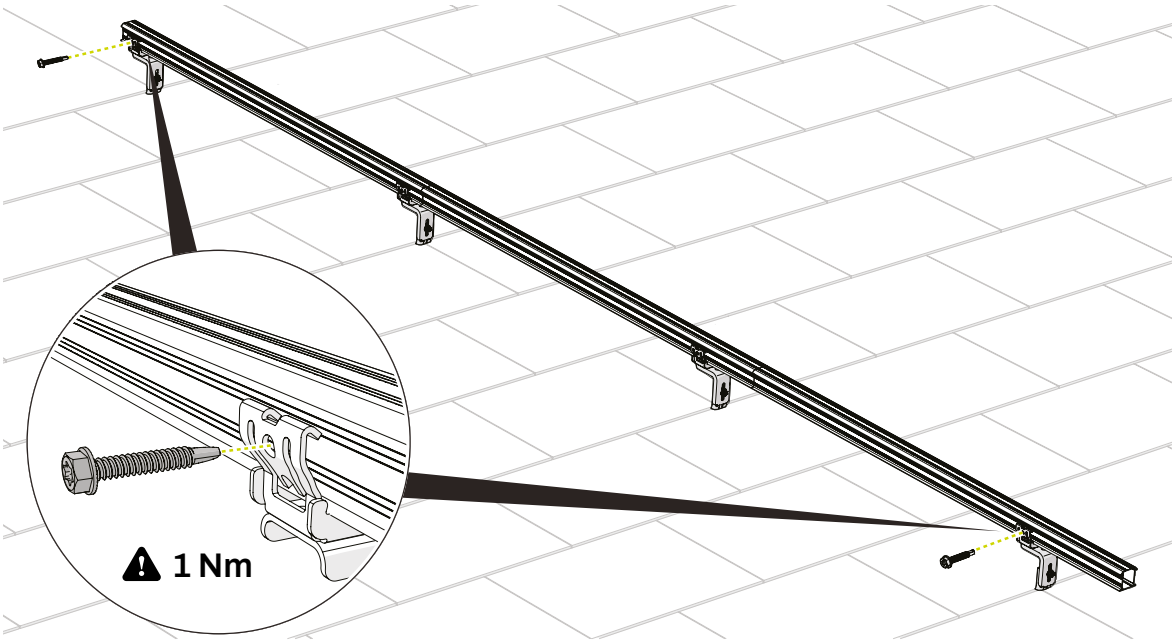

5. Optional: Attaching the MLPE clips

CLICKFIT EVO MLPE CLIP LIGHT WEIGHT

1 Click the Light Weight MLPE clip onto the rail
2 Click the optimiser on the Light Weight MLPE clip

Use one MLPE clip per solar panel.

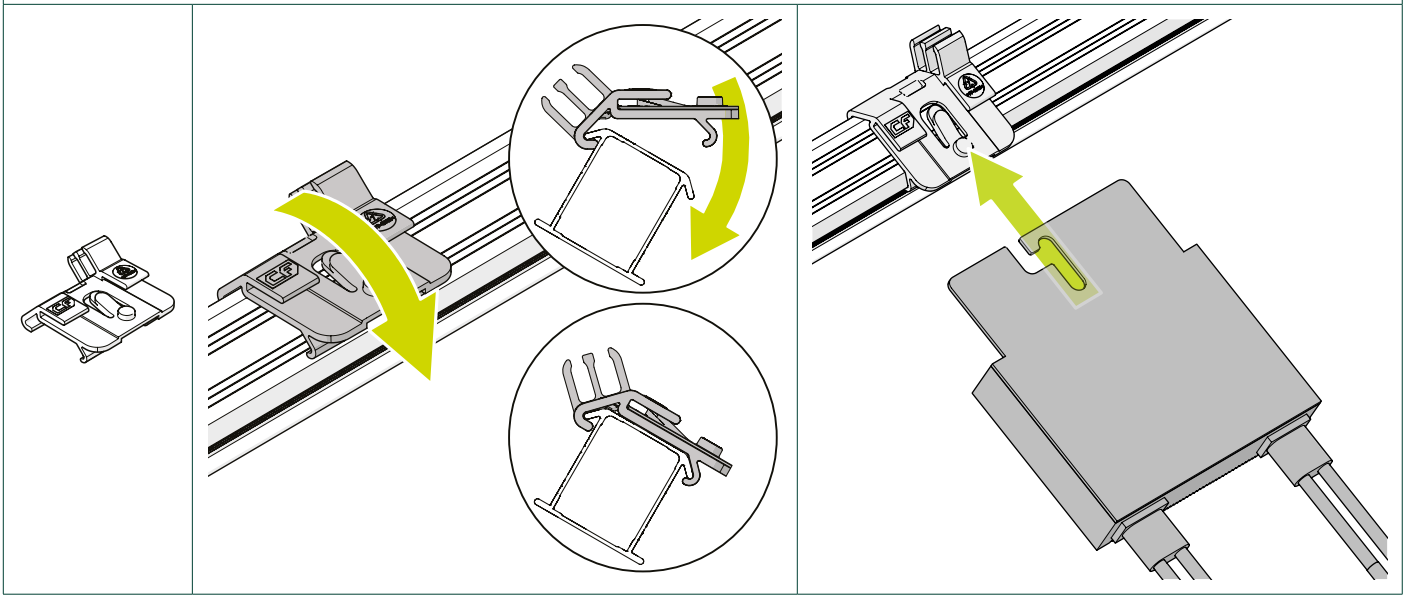

With vertical rail orientation you have to fix the MLPE clip by bending the edge of the mounting rail with adjustable pliers.

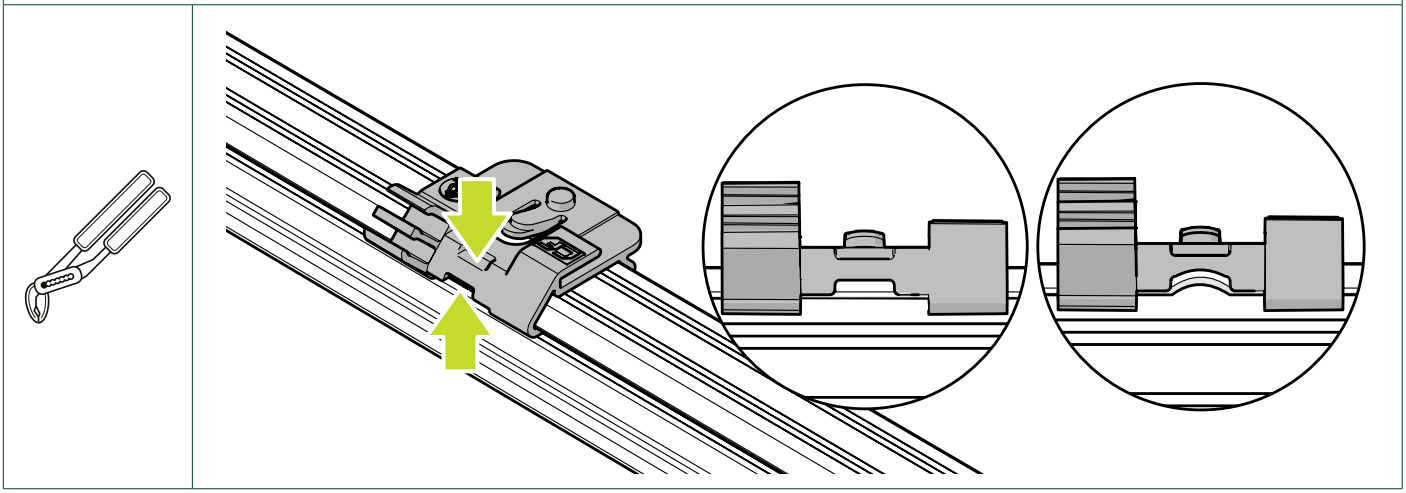

CLICKFIT EVO MLPE CLIP HEAVY WEIGHT

1 Attach the optimiser to the heavy weight MLPE clip
2 Click the heavy weight MLPE clip onto the rail

For larger optimizers (equipped with 2 slots), it is essential to use two Heavy Weight MLPE clips.

With vertical rail orientation you have to fix the cable clip by bending the edge of the mounting rail with adjustable pliers.

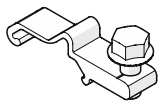

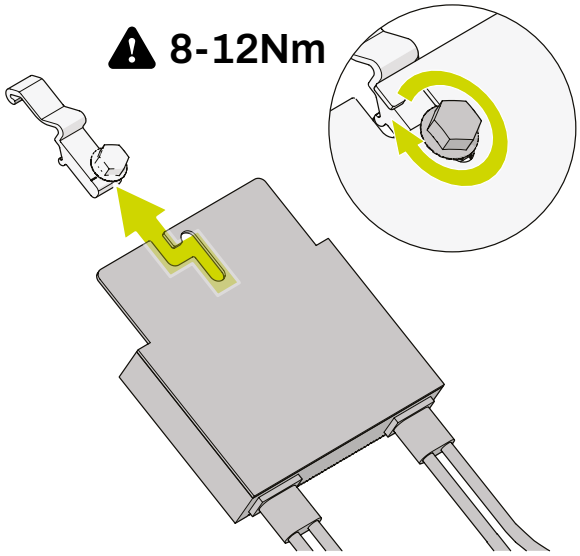

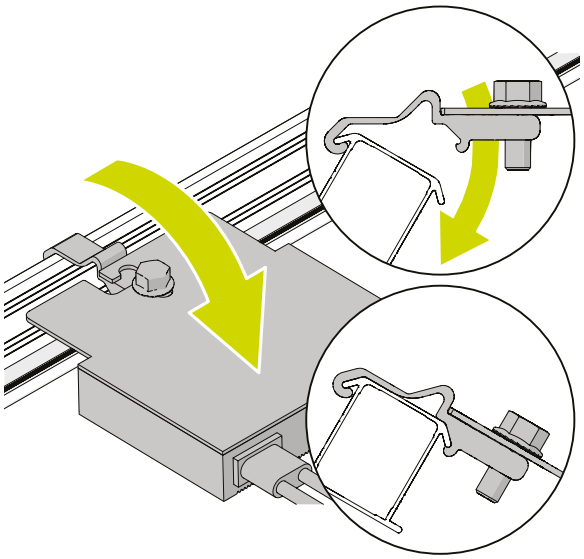

6. Mounting solar panels with 60mm panel clamps

MOUNTING THE FIRST PANEL

1 Optional: Click the Auxiliary set on the panel.

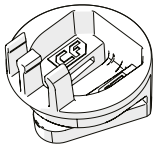

2×

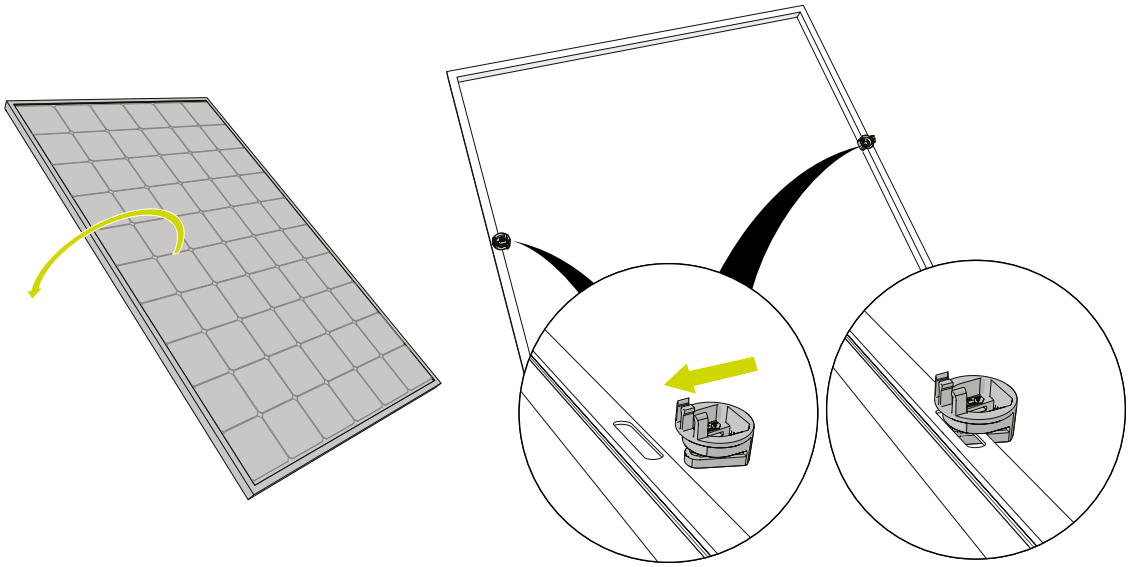

2 Optional: Click the cables of the panel firmly into the cable clamp.

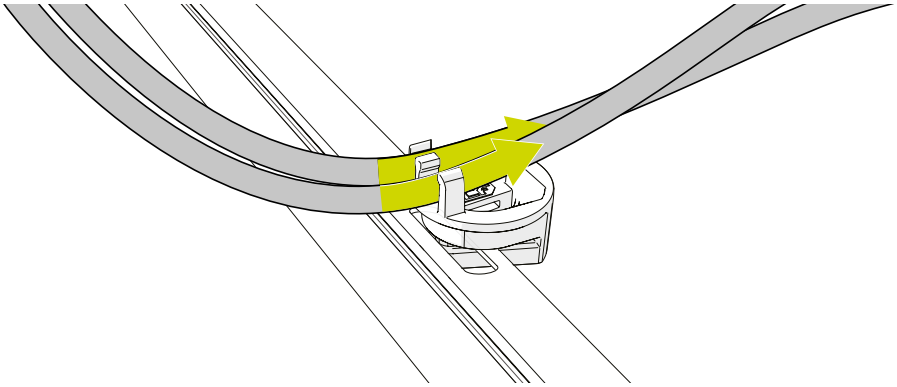

3 Slide the end caps onto the rails.

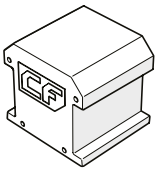

2×

4 Click the ClickFit EVO 60 End Clamps on the rails.

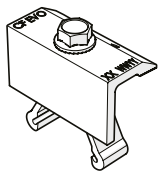

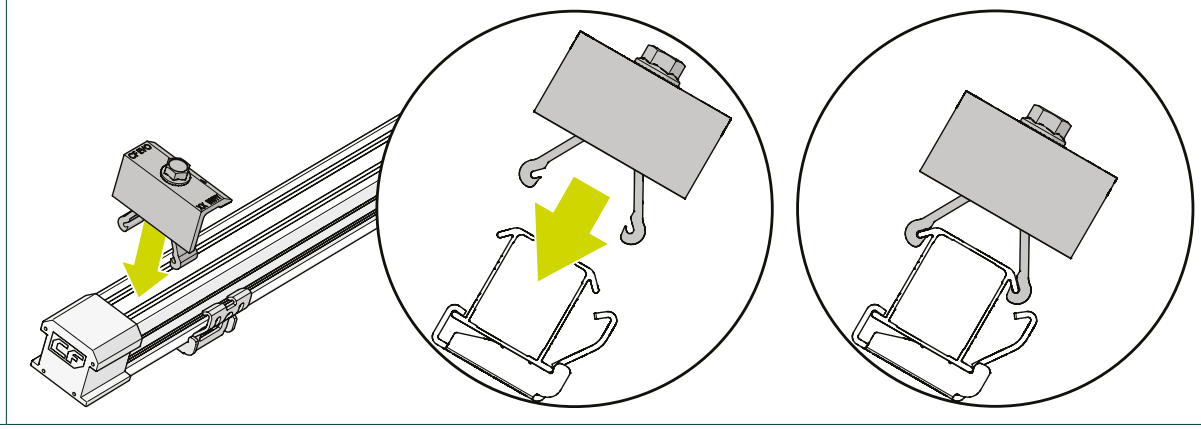

5 Optional: Guide the cables of the solar panel through the click connections.

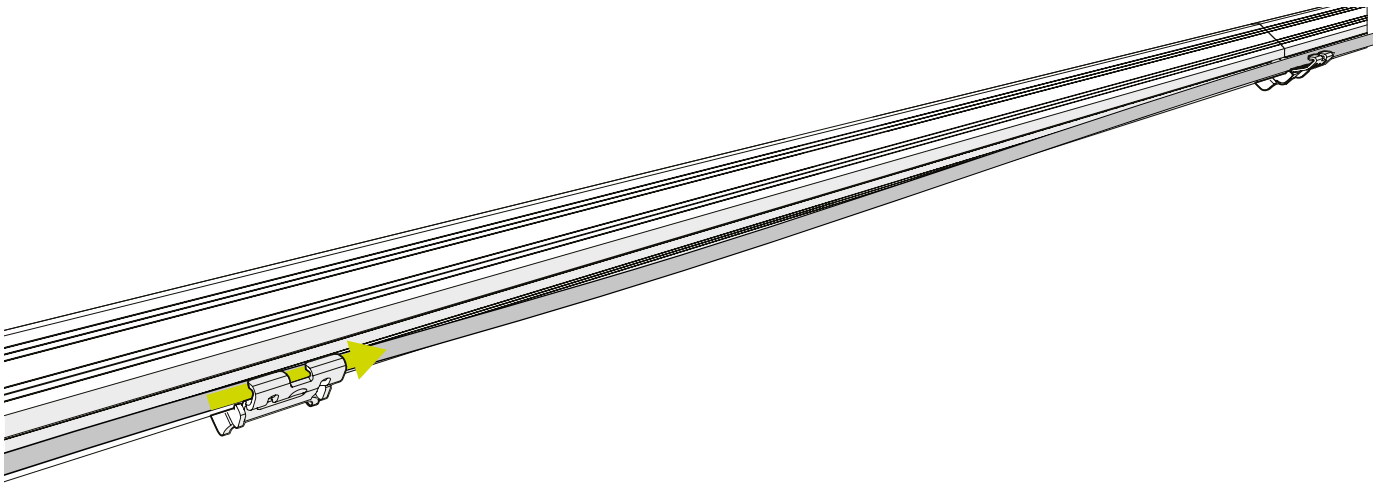

6 Place the panel on the rails and Slide the panel against the clamps.

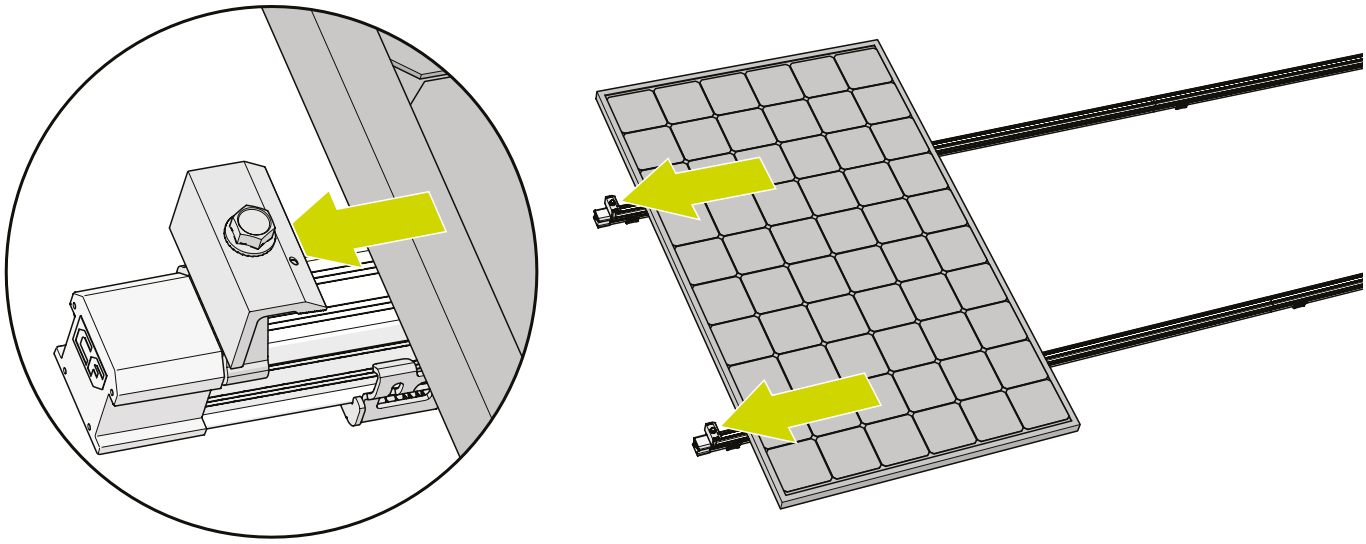

7 Fasten the screw of the end clamps to secure the panel. Apply a torque of 16.5 Nm.

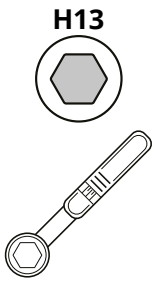

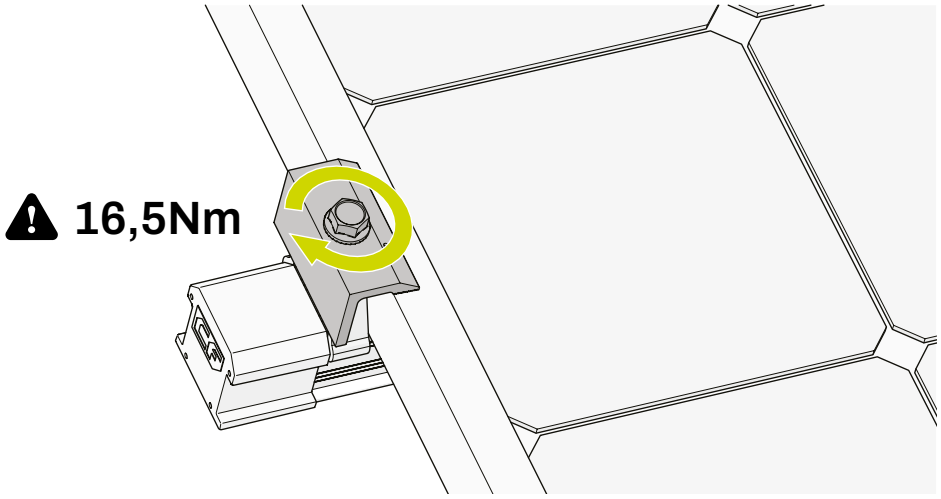

MOUNTING THE FOLLOWING PANELS

Optional: Repeat steps 6.1. and 6.2.: "Click the Auxiliary set on the panel" and "Click the cables of the panel firmly into the cable clamp".

8 Click the 60mm Mid clamps on the rails.

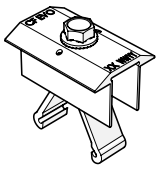

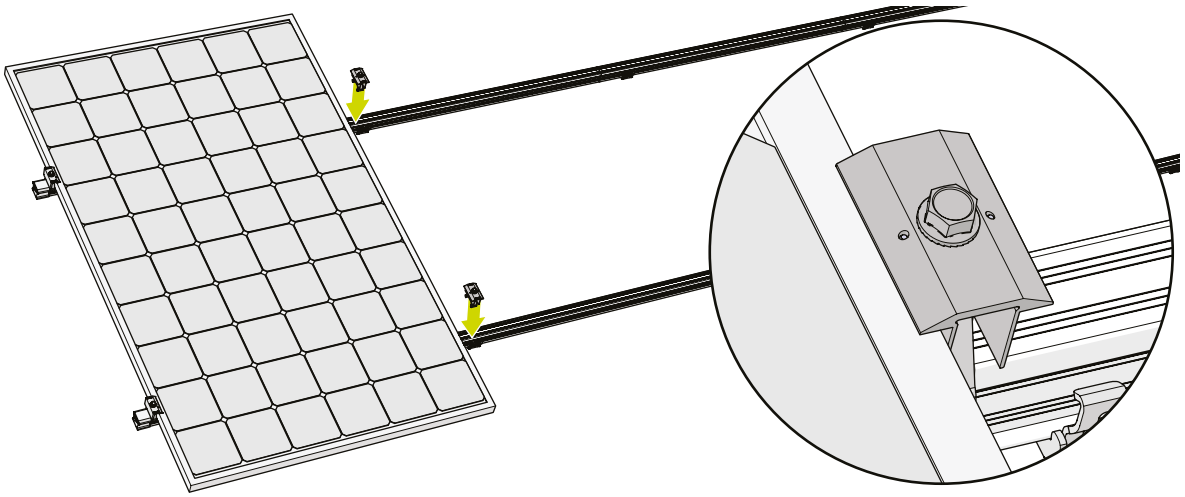

9 Place the next panel on the rails and slide the panel against the clamps.

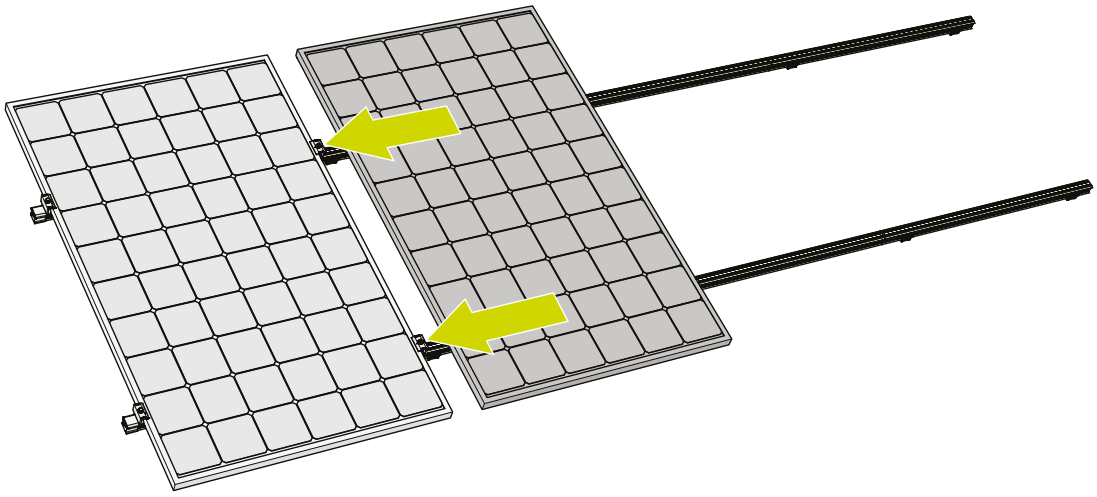

10 Fasten the screw of the mid clamps to secure the panel. Apply a torque of 16.5 Nm.

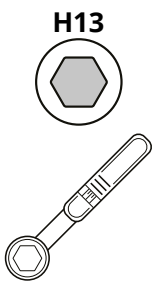

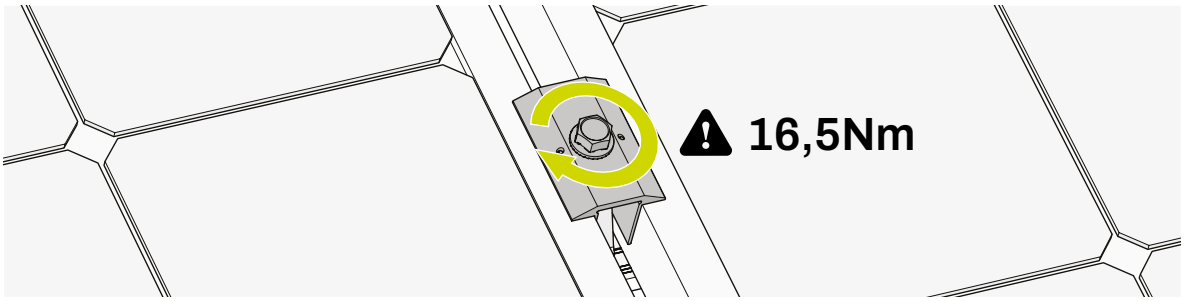

Repeat the steps in this chapter for all panels of the row.

MOUNTING THE LAST PANEL

Optional: Repeat steps 6.1. and 6.2.: "Click the Auxiliary set on the panel" and "Click the cables of the panel firmly into the cable clamp".

Repeat steps 6.8. and 6.9.: "Click the 60mm Mid clamps on the rails." and "Place the next panel on the rails and slide the panel against the clamps.".

11 Optional: saw the mounting rails to size

- If the overhang is **less** than 350 mm beyond the last slate roof hook, keep a minimum of 50 mm to a maximum of 70 mm rail length overhang for mounting the end cap (art. no. 1008066(-B)).
- If the overhang is **more** than 350 mm beyond the last slate roof hook, install an extra slate roof hook. Extend the mounting rail to at least 50 mm beyond the extra slate roof hook and attach the mounting rail to it.

The extra 50 mm provides sufficient length to fit an end cap (art. no. 1008066(-B)) to the mounting rails.

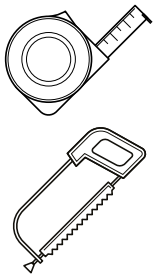

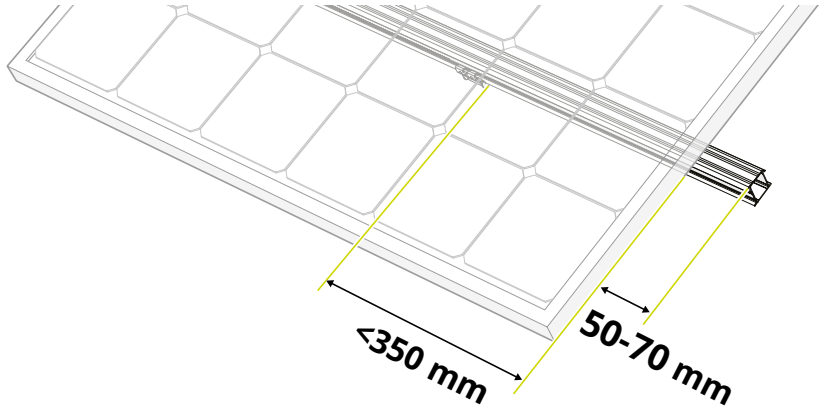

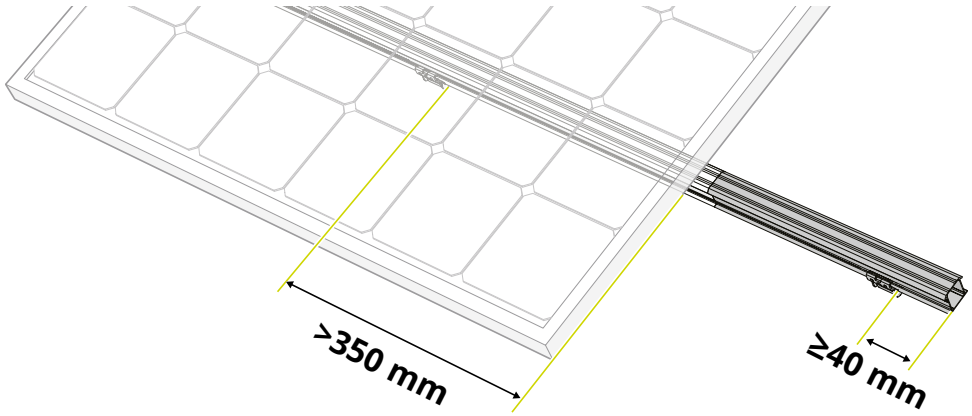

12 Click the ClickFit EVO 60 End Clamps on the rails.
13 Fasten the screw of the end clamps to secure the panel. Apply a torque of 16.5 Nm.

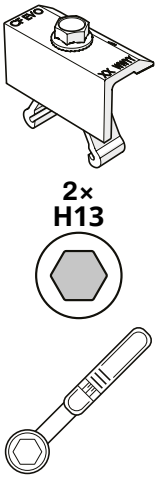

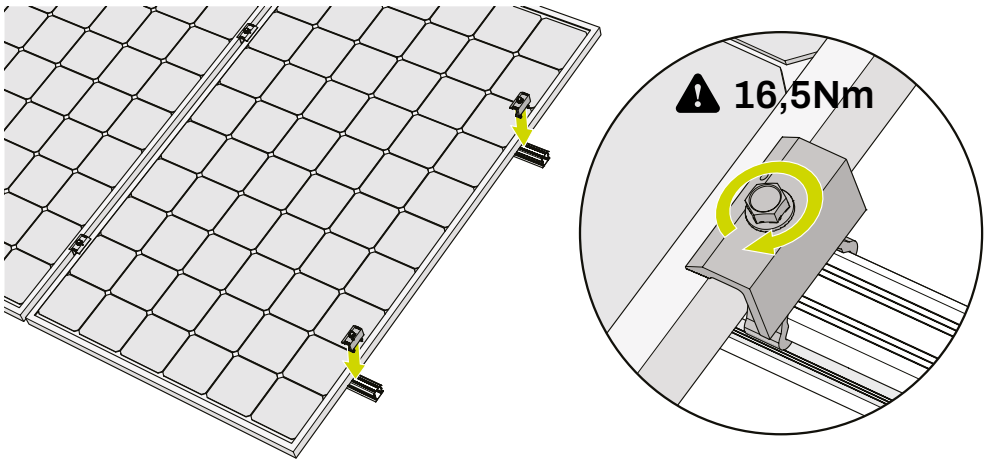

14 Slide the end caps onto the rails.

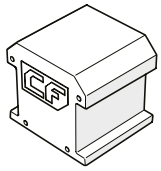

2×

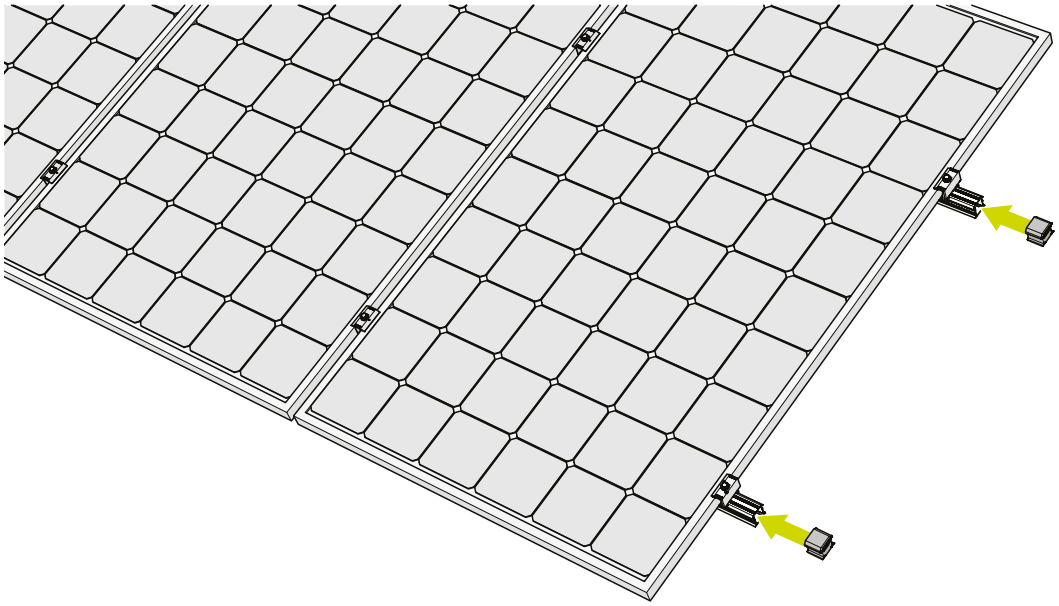

7. Mounting the solar panels with 35 mm panel clamps

MOUNTING THE FIRST PANEL

1 Optional: Click the Auxiliary set on the panel.

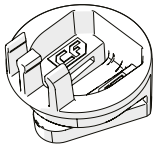

2×

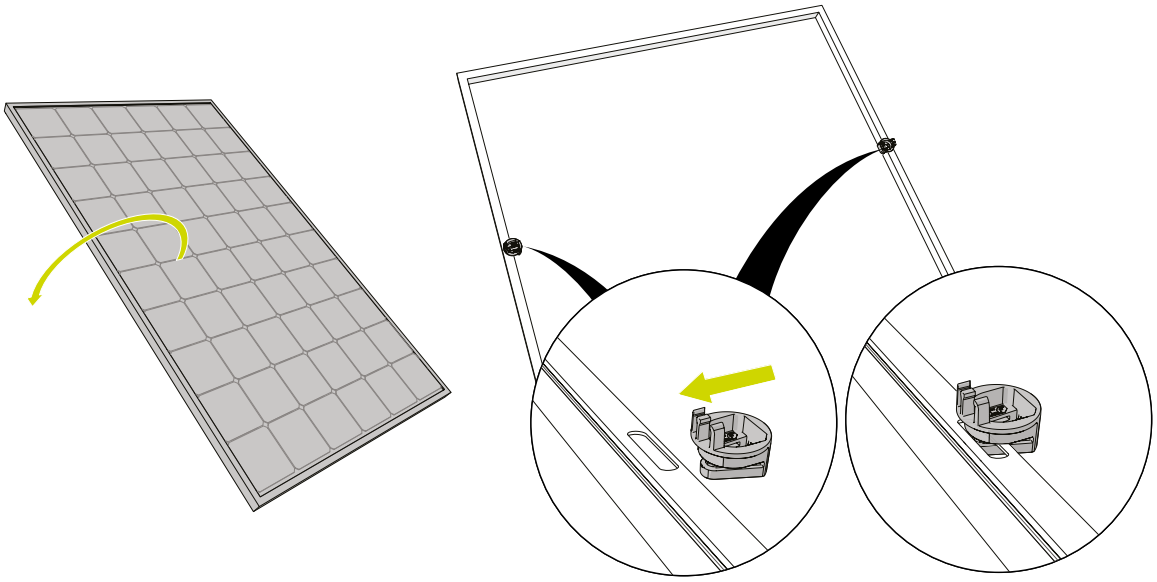

2 Optional: Click the cables of the panel firmly into the cable clamp.

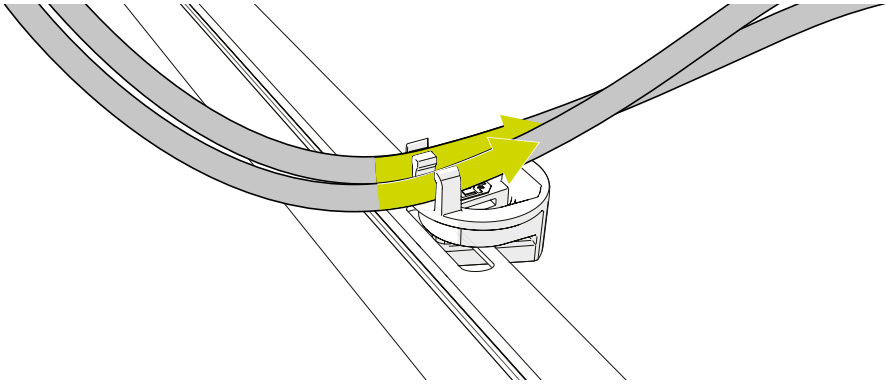

3 Click the 35mm module clamp on the rails.

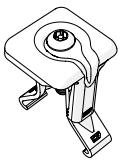

2×

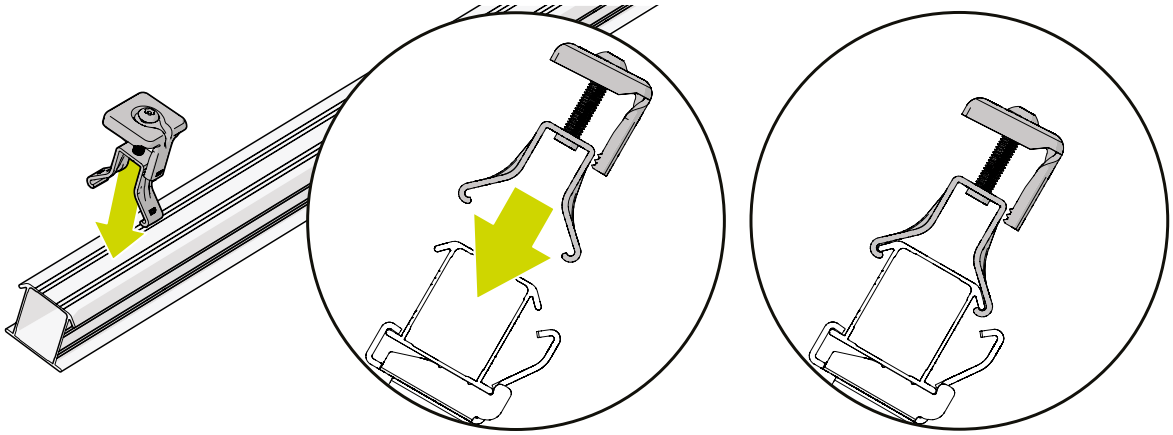

4 Slide the end caps onto the rails.

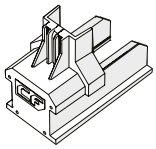

2×

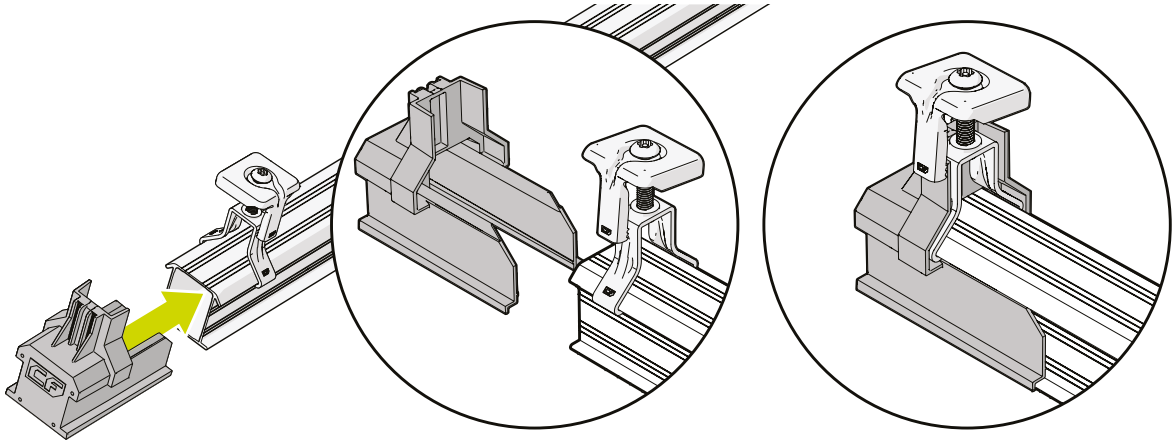

5 Rotate the upper part of the module clamp over the end cap.

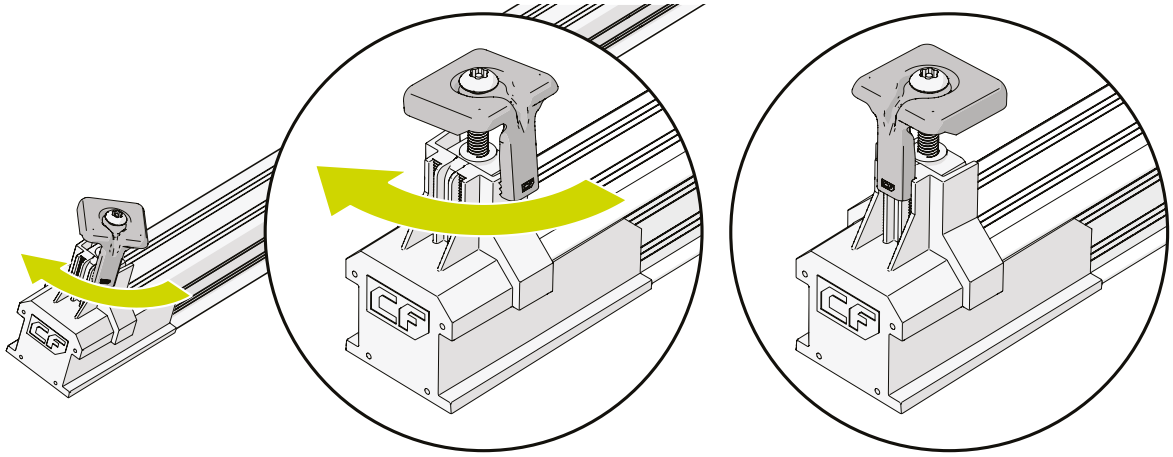

6 Optional: Guide the cables of the solar panel through the click connections.

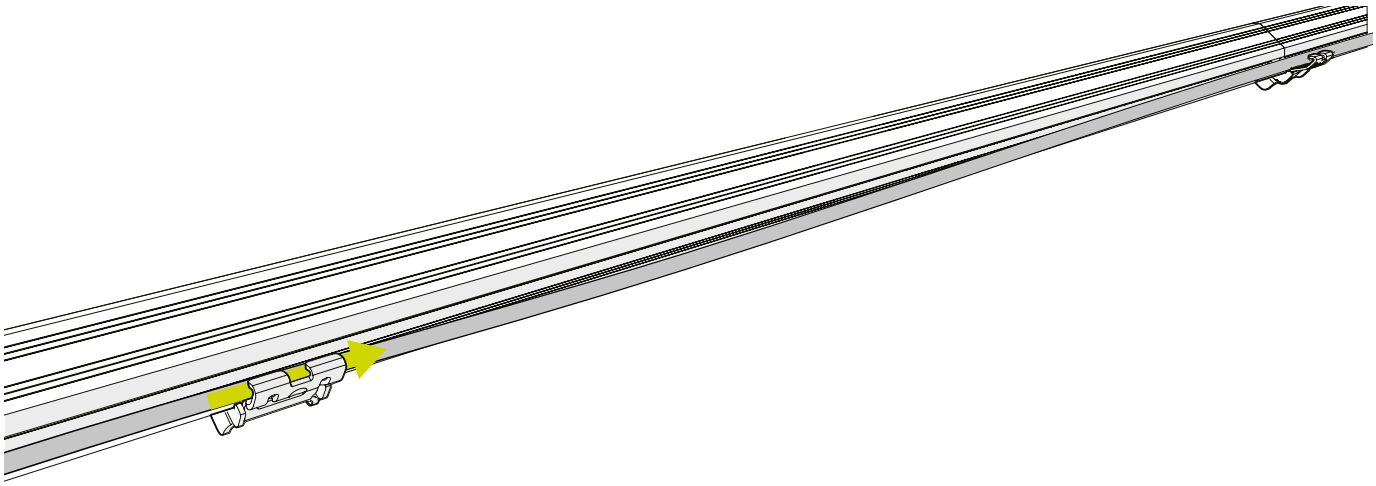

7 Place the panel on the rails and Slide the panel against the clamps.

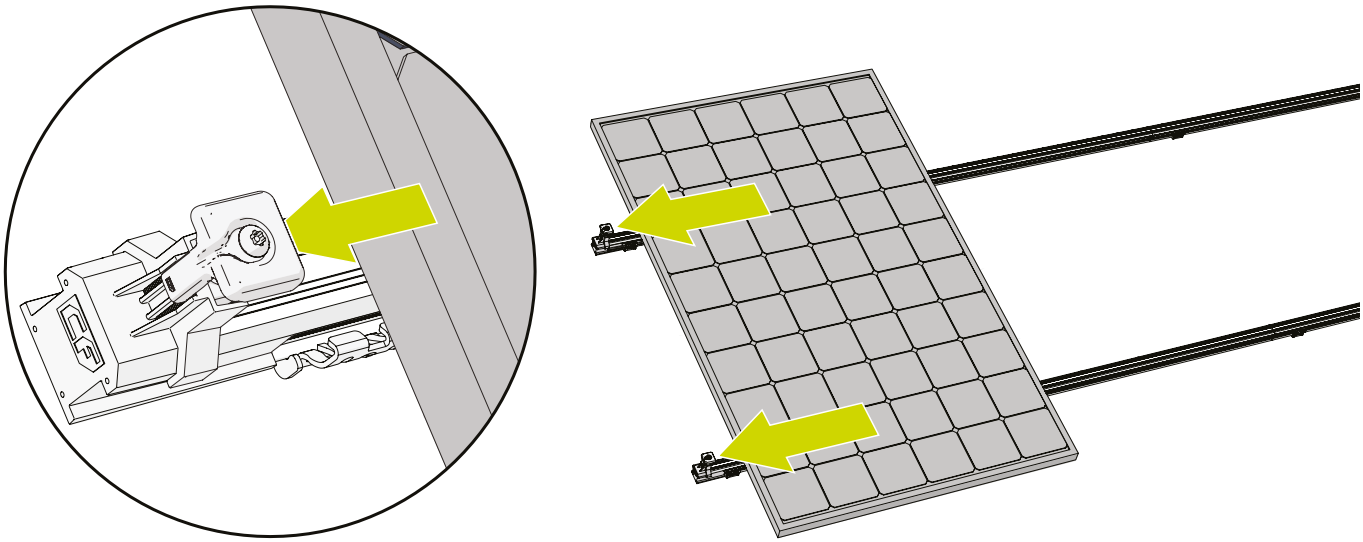

8 Screw the clamps onto the panel. Apply a torque of 4.5 Nm.

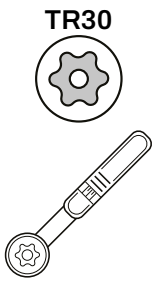

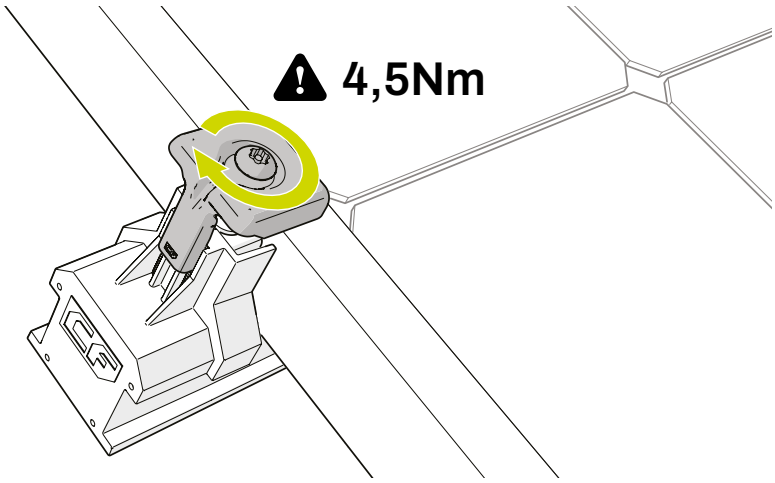

MOUNTING THE FOLLOWING PANELS

9 Click the universal module clamp on the rails.

Install the module clamp with the drainage channel of the module clamp pointing downwards.

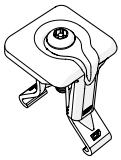

2×

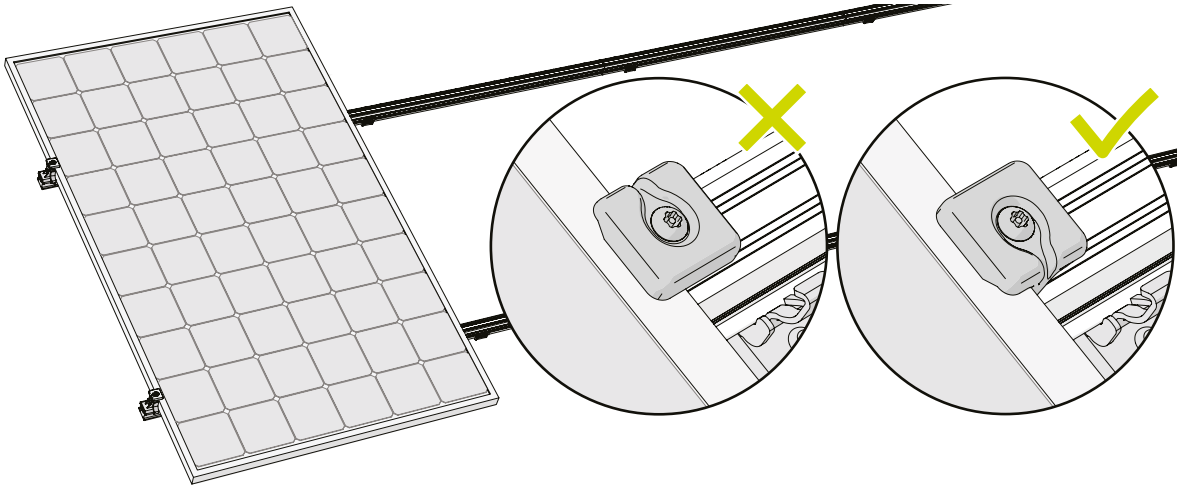

Optional: Repeat steps 7.1. and 7.2.: "Click the Auxiliary set on the panel" and "Click the cables of the panel firmly into the cable clamp".

10 Place the next panel on the rails and slide the panel against the clamps.

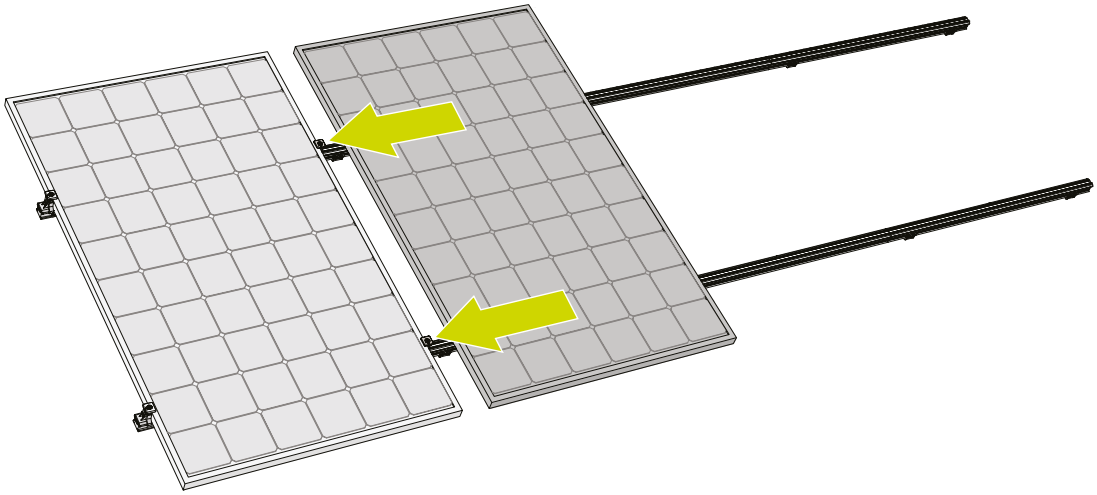

11 Screw the clamps onto the panel. Apply a torque of 4.5 Nm.

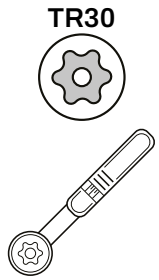

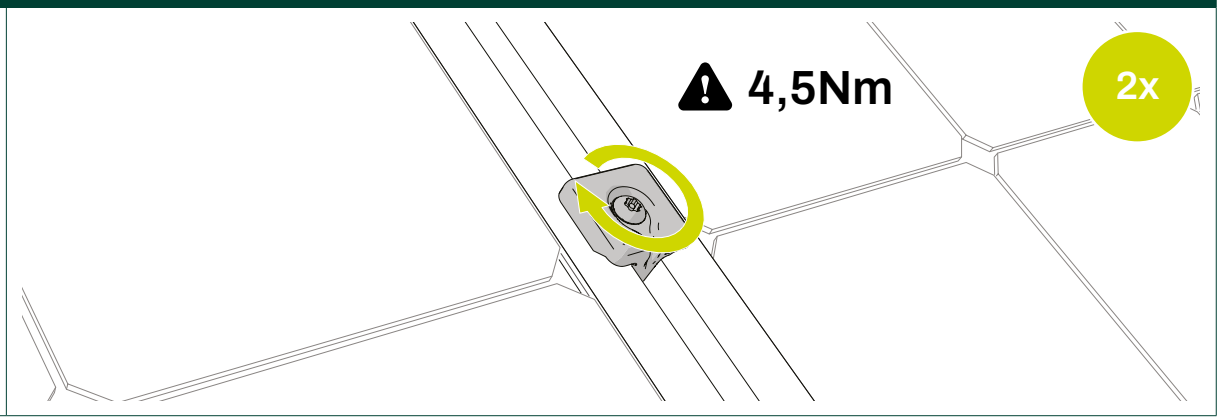

Repeat the steps in this chapter for all panels of the row.

MOUNTING THE LAST PANEL

☐	Optional: Repeat steps 7.1. and 7.2.: "Click the Auxiliary set on the panel" and "Click the cables of the panel firmly into the cable clamp".
☐	Repeat steps 7.9. and 7.10.: "Click the universal module clamp on the rails." and "Place the next panel on the rails and slide the panel against the clamps.".

12 Optional: saw the mounting rails to size

- If the overhang is **less** than 350 mm beyond the last slate roof hook, keep a minimum of 20 mm to a maximum of 35 mm rail length overhang for mounting the end cap (art. no. 1008066(-B)).
- If the overhang is **more** than 350 mm beyond the last slate roof hook, install an extra slate roof hook. Extend the mounting rail to at least 50 mm beyond the extra slate roof hook and attach the mounting rail to it.

The extra 50mm provides sufficient length to fit an end cap (article no. 1008066(-B)) to the mounting rails. For the end clamp, use the end clamp support (article no. 1008065(-B)).

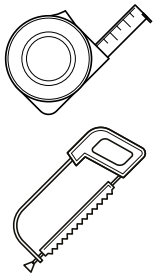

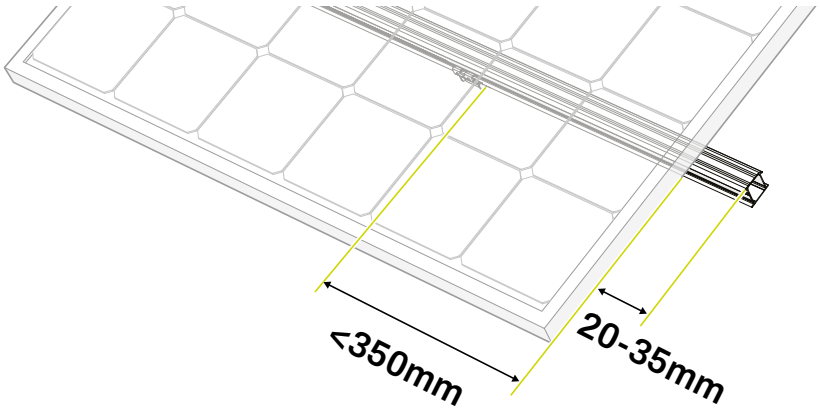

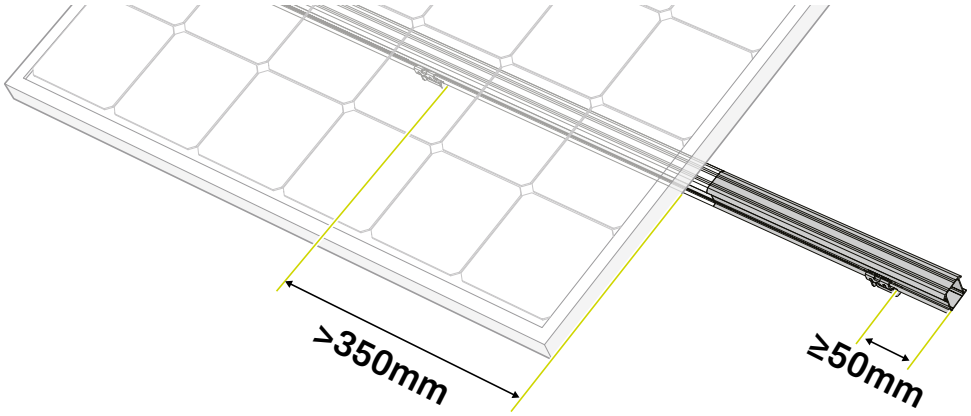

13 Click the universal module clamp on the rails.

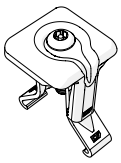

2×

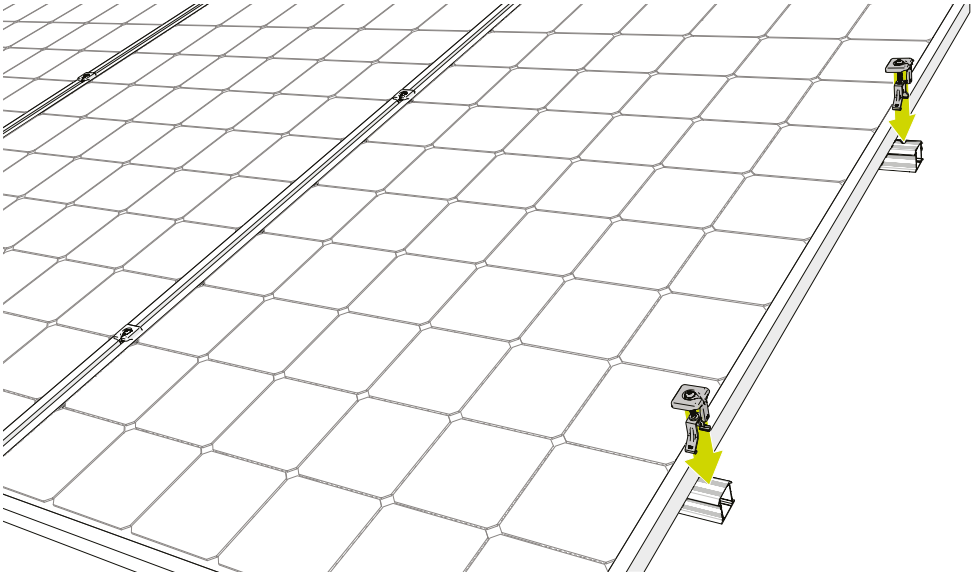

14 Slide the end caps onto the rails.

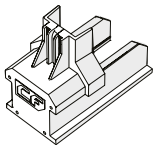

2×

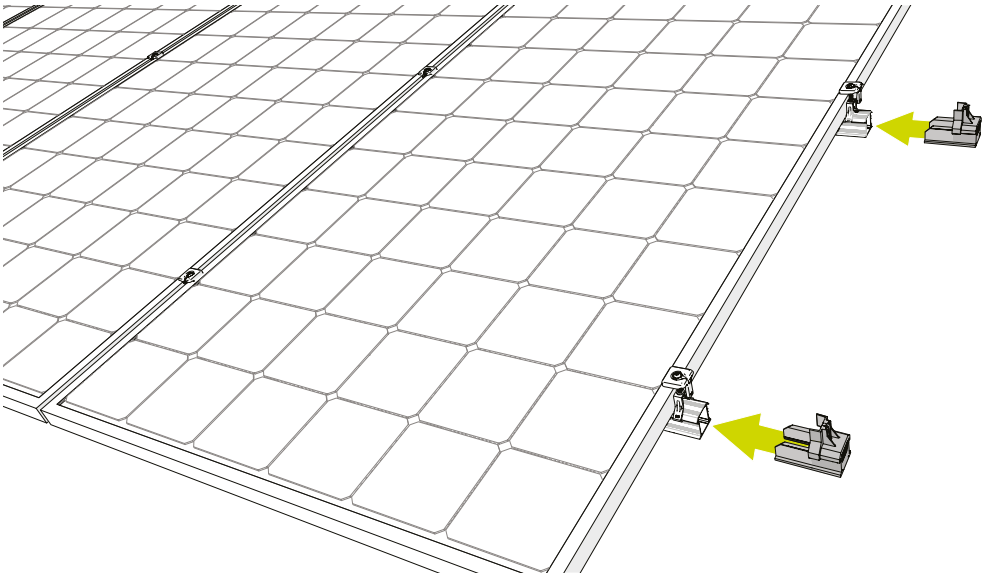

15 Rotate the upper part of the module clamp over the end cap.

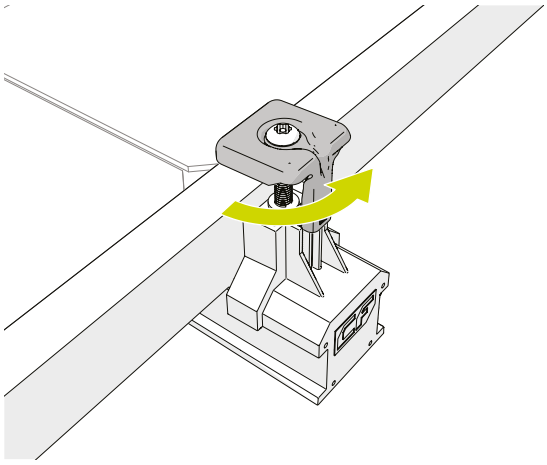

16 Screw the clamps onto the panel. Apply a torque of 4.5 Nm.

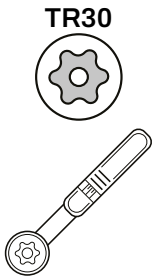

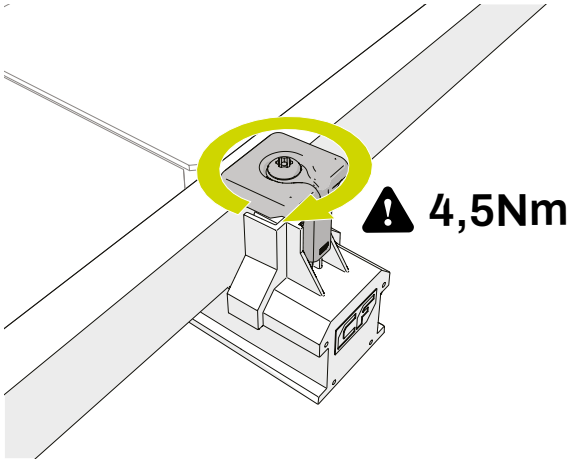

8. Mounting multiple rows

1 Mount each next row against the previous row

- Always keep a minimum of 12 mm between each row of panels in the case of horizontal rails, or each panel column in the case of vertical rails.
- Always follow the project plan from the calculator.

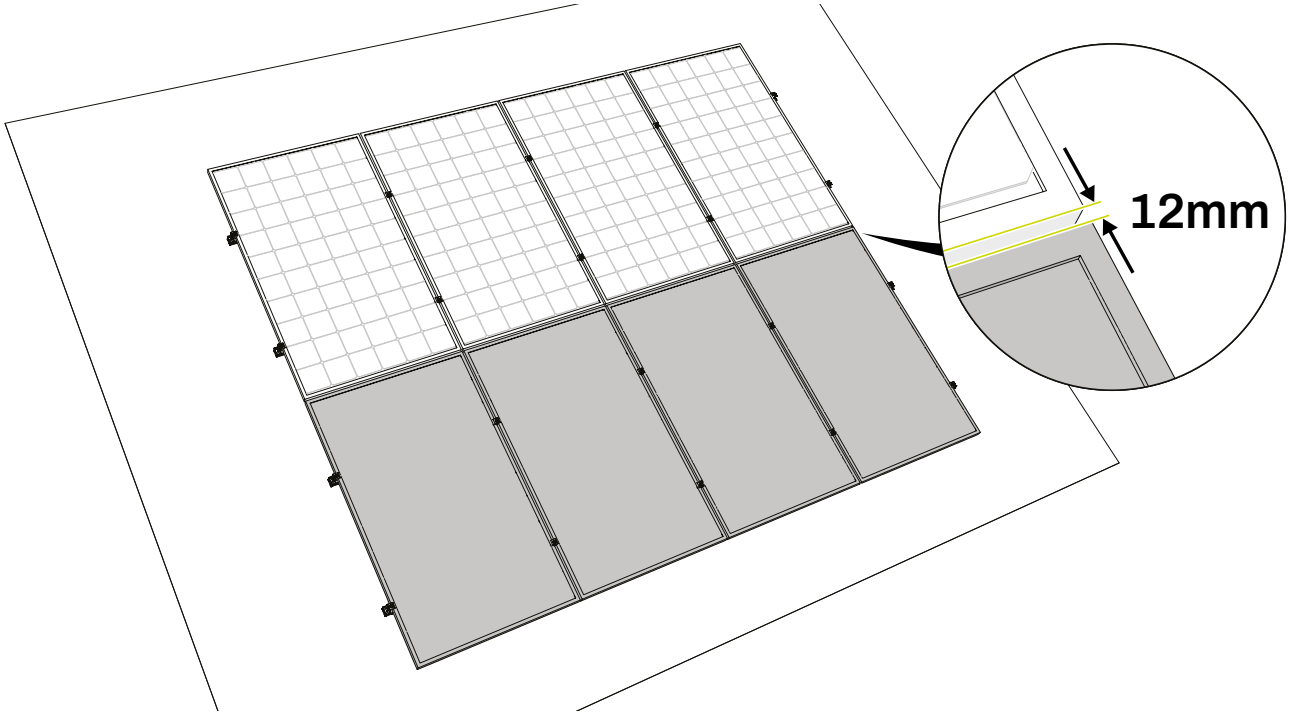

REMOVAL AND RECYCLING

GENERAL

Always follow local laws and regulations when dismantling the mounting system and disposing of it.