Technical data sheet

Fastening clip 1015, medium-duty

Item number: 1009230

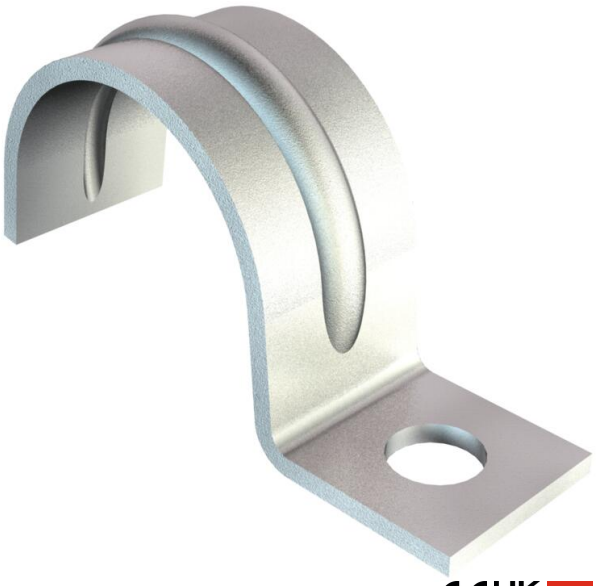

Single-lobe fastening clip for cables and pipes.
Beading from size 20.

CE UK CA E30 E90

St Steel

G Electrogalvanised

Master data

Item number	1009230
Type	1015 20 G
Description 1	Fastening clip
Description 2	single lobe
Manufacturer	OBO
Dimension	20mm
Material	Steel
Surface	Electrogalvanised
Surface standard	EN ISO 19598 / EN ISO 4042
Smallest sales unit	100
Unit of quantity	Piece
Weight	0.921 kg
Weight unit	kg/100 pc.
CO2 Footprint (GWP) Cradle-to-Gate	0,0182 kg CO2e / 1 Piece

Technical data sheet

Fastening clip 1015, medium-duty

Item number: 1009230

Dimensions

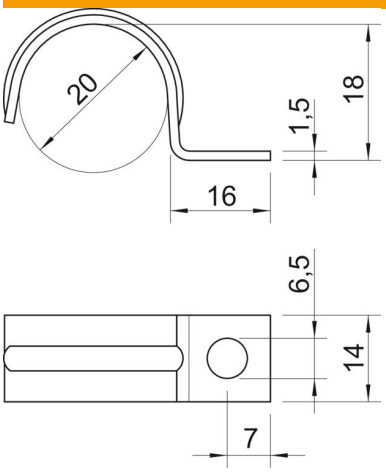

Length	16 mm
Width	14 mm
Height	18 mm
Dimension A	7 mm
Dimension b	14 mm
Dimension D	20 mm
Dimension H	18 mm
Dimension L	16 mm

Technical data

Distance to the wall	no
Number of cables/pipes	1
Version for	Single-lobe
Fastening type	Screw hole
Maintain electrical functions	yes
For diameter	20
Suitable in fire protection area	no
Halogen-free	yes
Plastic-covered	no
Hole size	6,5
Material thickness	1.5 mm
Nominal diameter	20 mm
ROHS-conformant	yes
UV-resistant	yes