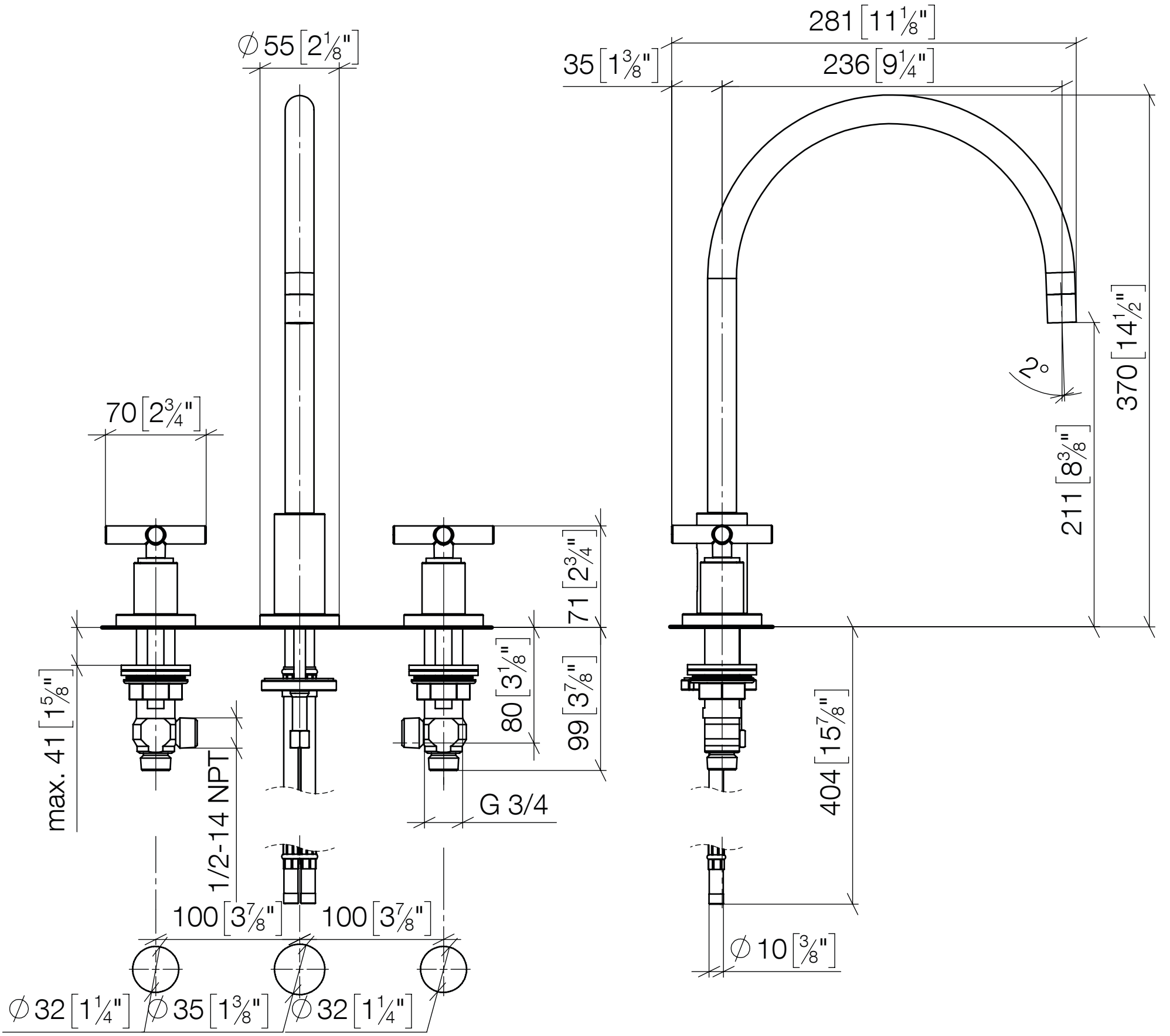
∅55 [2 1/8"]
70 [2 3/4"]
281 [11 1/8"]
35 [1 3/8"]
236 [9 1/4"]
370 [14 1/2"]
2°
211 [8 3/8"]
71 [2 3/4"]
80 [3 1/8"]
99 [3 7/8"]
max. 41 [1 5/8"]
1/2-14 NPT
G 3/4
404 [15 7/8"]
100 [3 7/8"]
100 [3 7/8"]
∅10 [3/8"]
∅32 [1 1/4"]
∅35 [1 3/8"]
∅32 [1 1/4"]