Technical data sheet

Fastening clip 604, light duty

Item number: 1003194



Single-lobe fastening clip for cables and pipes.
* Sizes 3 and 4 are not suitable for nail device
* Sizes 3 to 21 are not suitable for bolt-firing tool

St	Steel
G	Electrogalvanised

Master data

Item number	1003194
Type	604 19 G
Description 1	Fastening clip
Description 2	single lobe
Manufacturer	OBO
Dimension	19mm
Material	Steel
Surface	Electrogalvanised
Surface standard	EN ISO 19598 / EN ISO 4042
Smallest sales unit	100
Unit of quantity	Piece
Weight	0.411 kg
Weight unit	kg/100 pc.
CO2 Footprint (GWP) Cradle-to-Gate	0,0104 kg CO2e / 1 Piece

Technical data sheet

Fastening clip 604, light duty

Item number: 1003194

Dimensions

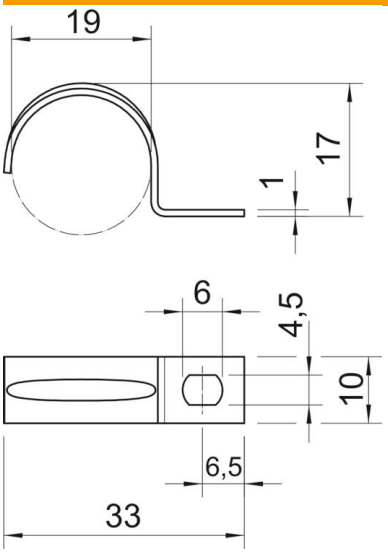

Length	33 mm
Width	10 mm
Height	17 mm
Dimension A	6.5 mm
Dimension b	10 mm
Dimension D	19 mm
Dimension d	4.5 mm
Dimension e	6 mm
Dimension H	17 mm
Dimension L	33 mm
Dimension t	1 mm

Technical data

Distance to the wall	no
Number of cables/pipes	1
Version for	Single-lobe
Fastening type	Screw hole
For diameter	19
Suitable in fire protection area	no
Halogen-free	yes
Plastic-covered	no
Hole size	4,5 x 6
Material thickness	1 mm
Nominal diameter	19 mm
ROHS-conformant	yes
UV-resistant	yes