Data Sheet | Item Number: 789-126

Release mechanism; white

https://www.wago.com/789-126

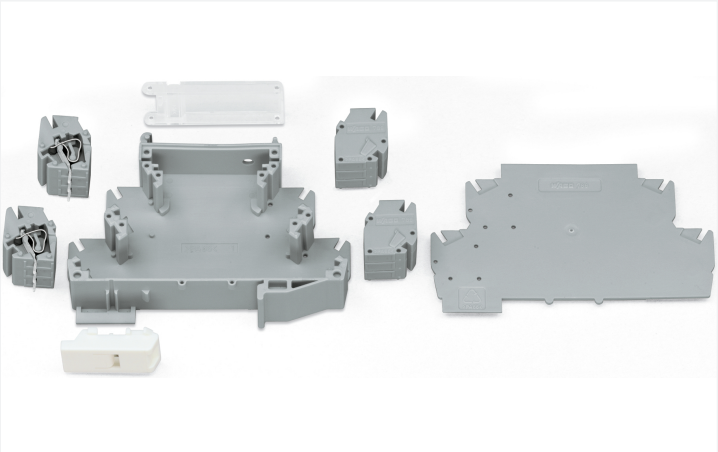

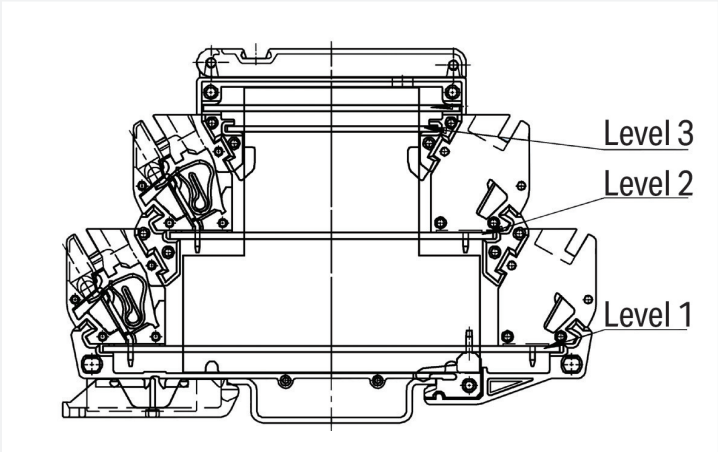

Color: white

Similar to illustration

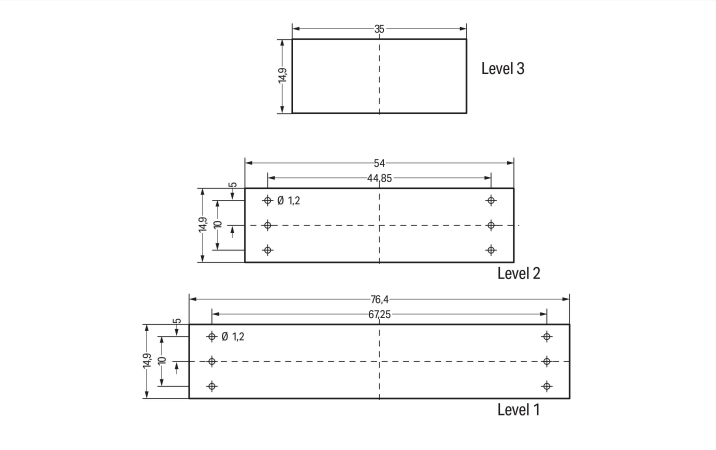

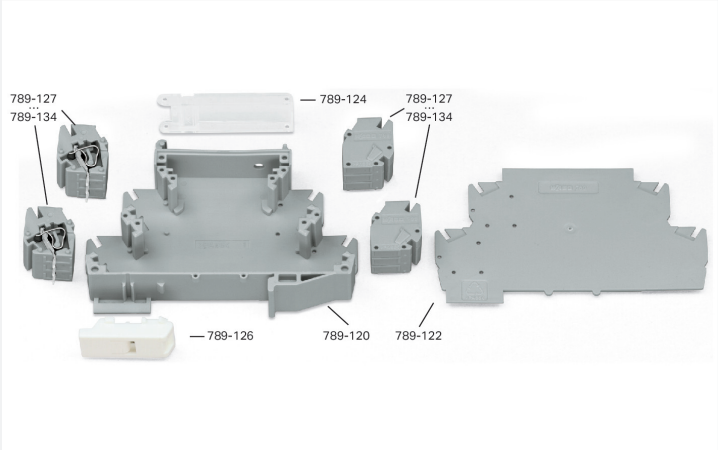

PCB dimensions, vertical mounting: (PCB thickness max. 1.5 mm) in level 1; (PCB thickness max. 1 mm) in level 2 and 3

Universal modular component plug housing, as rail-mount terminal block – release mechanism

Mechanical data	
Housing design	DIN-rail-mount enclosure
Suitable	for 789-120

Material data

Color	white

Commercial data

Product Group	6 (INTERFACE ELECTRONIC)
PU (SPU)	25 (1) pcs
Packaging type	Box
Country of origin	DE
GTIN	4044918112888
Customs tariff number	85472000900

Product Classification

UNSPSC	39121324
eCl@ss 10.0	27-18-27-02
eCl@ss 9.0	27-18-27-02
ETIM 9.0	EC001031
ETIM 10.0	EC001031
ECCN	NO US CLASSIFICATION

Environmental Product Compliance

RoHS Compliance Status	Compliant,No Exemption

Downloads

Environmental Product Compliance

Compliance Search

Environmental Product Compliance 789-126

CAD/CAE-Data

CAD data

2D/3D Models 789-126

CAE data

WSCAD Universe 789-126

ZUKEN Portal 789-126

 Continued on next page

1 Compatible Products

1.1 Optional Accessories

1.1.1 Installation

1.1.1.1 DIN-rail-mount enclosure

Item No.: 789-120
Housing 55 mm; gray