Data Sheet | Item Number: 288-622

Fixing foot for DIN 35 rail; gray

https://www.wago.com/288-622

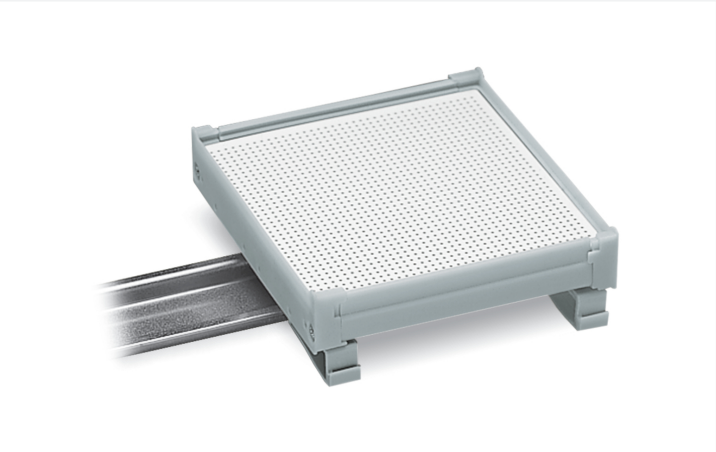

Color: gray

Similar to illustration

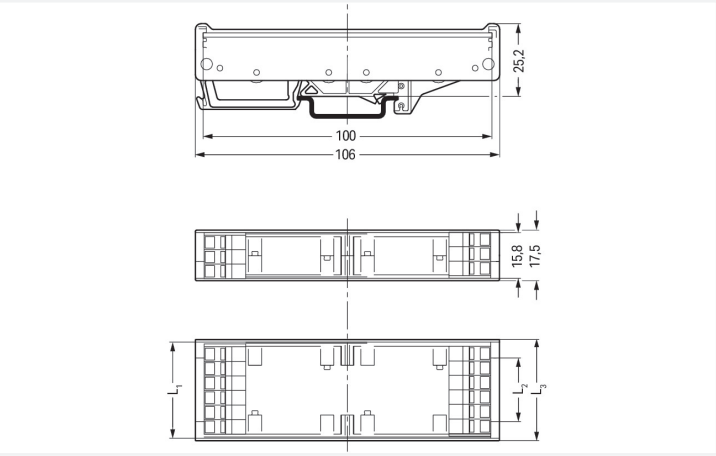

Dimensions in mm
L1 = PCB/cover lengthL2 = L1 – 15.8 mm (L2 = carrier base length)L3 = L1 + 2 mm

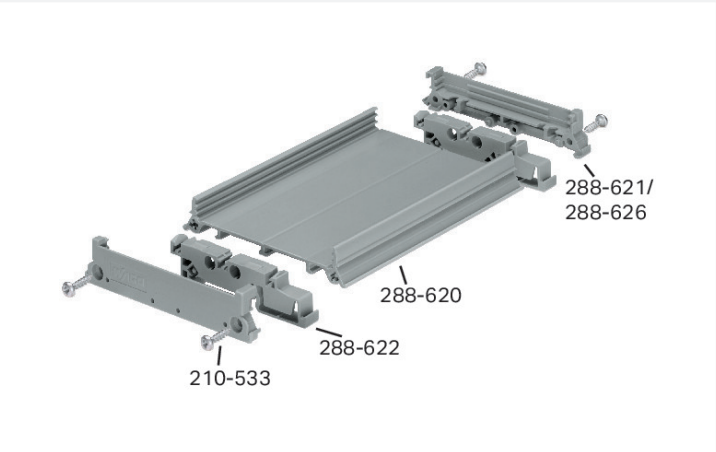

DIN-rail-mount PCB carrier, size 2

DIN-rail-mount PCB carrier, size 2 – mounting foot for DIN-35 rail

Mechanical data	
Mounting type	DIN-35 rail

Material data	
Color	gray
Housing material	PA 6.6

Continued on next page

Commercial data

Product Group	6 (INTERFACE ELECTRONIC)
PU (SPU)	100 (1) pcs
Packaging type	Box
Country of origin	DE
GTIN	4017332639460
Customs tariff number	39269097900

Product Classification

UNSPSC	39121702
eCl@ss 10.0	27-18-27-02
eCl@ss 9.0	27-18-27-02
ETIM 9.0	EC001031
ETIM 8.0	EC001031
ECCN	NO US CLASSIFICATION

Environmental Product Compliance

RoHS Compliance Status	Compliant,No Exemption

Downloads

Environmental Product Compliance

Compliance Search

Environmental Product Compliance 288-622

CAD/CAE-Data

CAD data

2D/3D Models 288-622

CAE data

WSCAD Universe 288-622

ZUKEN Portal 288-622

1 Compatible Products

1.1 Optional Accessories

1.1.1 Installation

1.1.1.1 Mounting accessories

Item No.: 210-533
Phillips screw 2.9 x 13

 Continued on next page

1.1.1.2 Mounting carrier and mounting feet

Item No.: 288-620
Track section; Size 2; 1 m long; gray

Item No.: 288-620/024-000
Track section; Size 2; gray