Technical data sheet

Screw-in spacer clip, heavy-duty version M6

Item number: 1385127

Can be screwed onto M6 thread. Size 27 FT is suitable for M25. Size 42.5 FT is suitable for M40. Size 48.5 FT is suitable for M50. Size 60 FT is suitable for M63.



St Steel

FT Hot-dip galvanised

Master data

Item number	1385127
Type	2900WM6 54 FT
Description 1	Distance saddle
Description 2	with threaded connection M6
Manufacturer	OBO
Dimension	1 3/4"
Material	Steel
Surface	Hot-dip galvanised
Surface standard	DIN EN ISO 1461
Smallest sales unit	20
Unit of quantity	Piece
Weight	10.4 kg
Weight unit	kg/100 pc.
CO2 Footprint (GWP) Cradle-to-Gate	0,2375 kg CO2e / 1 Piece

Technical data sheet

Screw-in spacer clip, heavy-duty version M6

Item number: 1385127

Dimensions

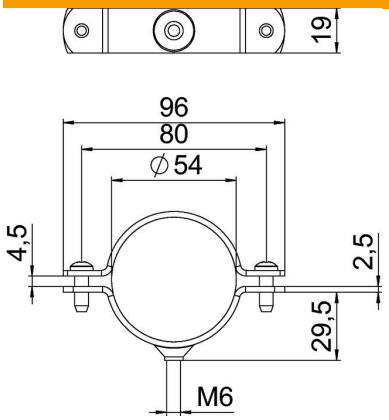

Length	96 mm
Width	20 mm
Dimension A	96 mm
Dimension B	80 mm
Dimension D	54 mm
Dimension d min.	54 mm
Dimension t	2.5 mm
Dimension t1 (mm)	2.5 mm
Dimension x	3 mm

Technical data

Version for	Closed
Fastening type	Screw hole
For diameter	54
Suitable in fire protection area	no
Thread	M6
Size	1 3/4"
Halogen-free	no
Plastic-covered	no
Hole size	M6
Material thickness	2.5 mm
ROHS-conformant	yes
Bolt	M6 x 18
Clamping range D, max.	54 mm
Clamping range D, min.	51 mm
UV-resistant	yes