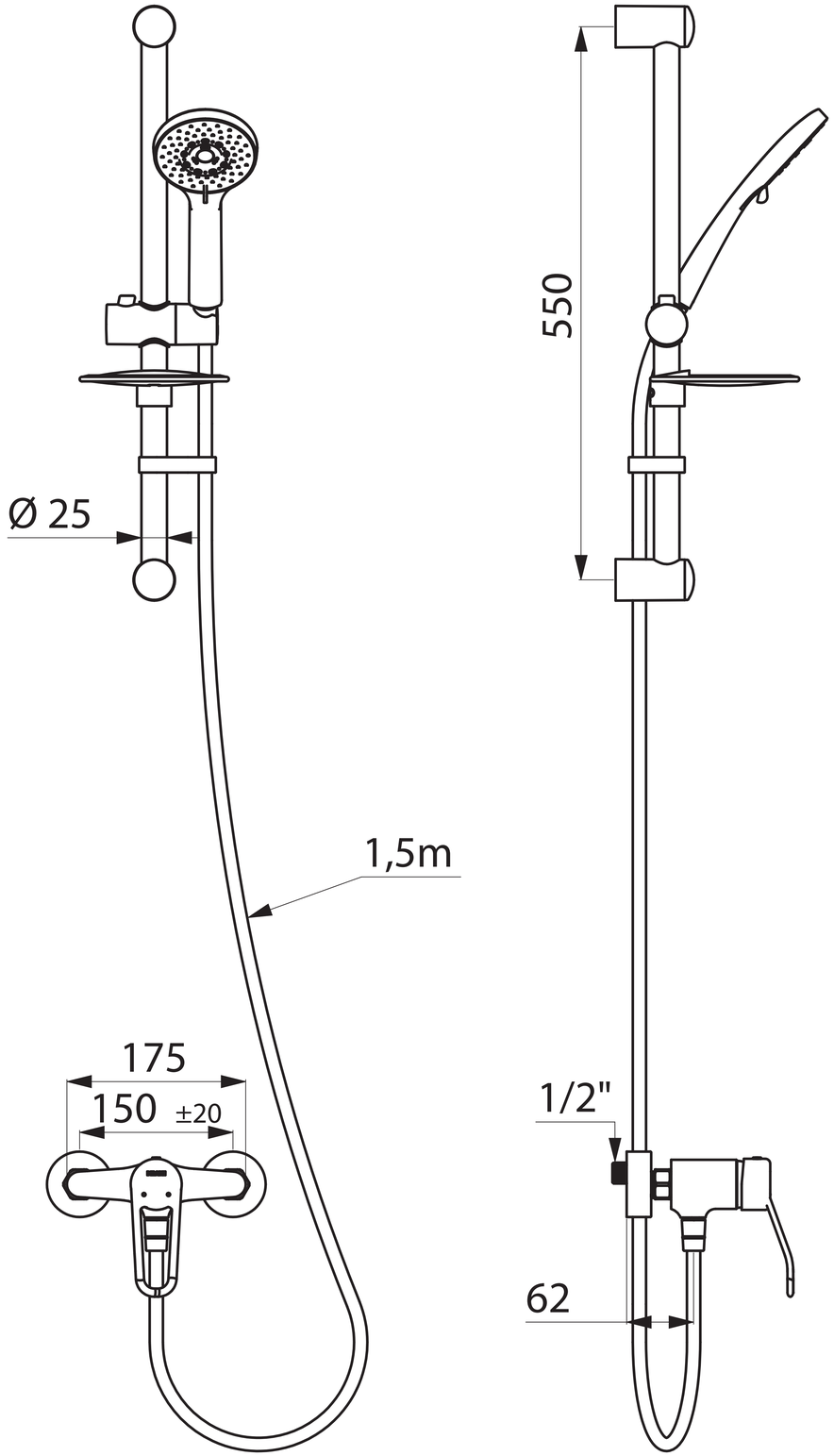
Ø 25
1,5m
175
150 ±20
550
1/2"
62