# Technical data sheet

## Fastening clip 604, light duty

## Item number: 1003232



Single-lobe fastening clip for cables and pipes.
* Sizes 3 and 4 are not suitable for nail device
* Sizes 3 to 21 are not suitable for bolt-firing tool

| | |
|---|---|
| St | Steel |
| G | Electrogalvanised |

### Master data

| | |
|---|---|
| Item number | 1003232 |
| Type | 604 23 G |
| Description 1 | Fastening clip |
| Description 2 | single lobe |
| Manufacturer | OBO |
| Dimension | 23mm |
| Material | Steel |
| Surface | Electrogalvanised |
| Surface standard | EN ISO 19598 / EN ISO 4042 |
| Smallest sales unit | 100 |
| Unit of quantity | Piece |
| Weight | 0.49 kg |
| Weight unit | kg/100 pc. |
| CO2 Footprint (GWP) Cradle-to-Gate | 0,0099 kg CO2e / 1 Piece |

# Technical data sheet

## Fastening clip 604, light duty

## Item number: 1003232

### Dimensions

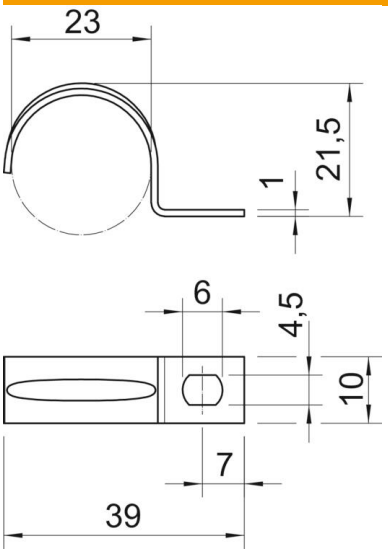


| | |
|---|---|
| Length | 39 mm |
| Width | 10 mm |
| Height | 21.5 mm |
| Dimension A | 7 mm |
| Dimension b | 10 mm |
| Dimension D | 23 mm |
| Dimension d | 4.5 mm |
| Dimension e | 6 mm |
| Dimension H | 21.5 mm |
| Dimension L | 39 mm |
| Dimension t | 1 mm |

### Technical data

| | |
|---|---|
| Distance to the wall | no |
| Number of cables/pipes | 1 |
| Version for | Single-lobe |
| Fastening type | Screw hole |
| For diameter | 23 |
| Suitable in fire protection area | no |
| Halogen-free | yes |
| Plastic-covered | no |
| Hole size | 4,5 x 6 |
| Material thickness | 1 mm |
| Nominal diameter | 23 mm |
| ROHS-conformant | yes |
| UV-resistant | yes |