Technical data sheet

Fastening clip 605, medium duty, G

Item number: 1018434



Two lobe fastening clips for cables and pipes.
* Sizes 7 to 12 not suitable for bolt-firing tool.

St	Steel
G	Electrogalvanised

Master data

Item number	1018434
Type	605 43 G
Description 1	Fastening clip
Description 2	two lobe
Manufacturer	OBO
Dimension	43mm
Material	Steel
Surface	Electrogalvanised
Surface standard	EN ISO 19598 / EN ISO 4042
Smallest sales unit	50
Unit of quantity	Piece
Weight	2.324 kg
Weight unit	kg/100 pc.
CO2 Footprint (GWP) Cradle-to-Gate	0,0436 kg CO2e / 1 Piece

Technical data sheet

Fastening clip 605, medium duty, G

Item number: 1018434

Dimensions

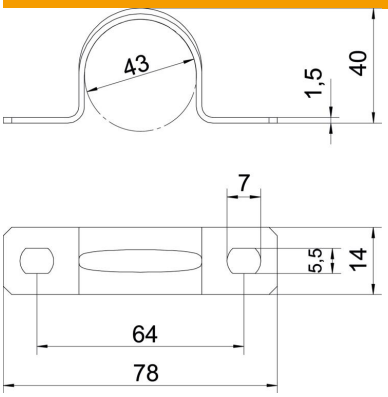

Length	78 mm
Width	14 mm
Height	40 mm
Dimension A	78 mm
Dimension B	64 mm
Dimension b	14 mm
Dimension D	43 mm
Dimension d	5.5 mm
Dimension e	7 mm
Dimension H	40 mm
Dimension t	1.5 mm

Technical data

Distance to the wall	no
Number of cables/pipes	1
Version for	Two-lobe
Fastening type	Screw hole
For diameter	43
Suitable in fire protection area	no
Halogen-free	yes
Plastic-covered	no
Hole size	5,5 x 7
Material thickness	1.5 mm
Nominal diameter	43 mm
ROHS-conformant	yes
UV-resistant	yes