Technical data sheet

Strain relief clip 7901

Item number: 1435019



Strain relief clip 5 mm

St	Steel
G	Electrogalvanised

Master data

Item number	1435019
Type	7901 5 G
Description 1	Strain relief clip
Manufacturer	OBO
Dimension	5mm
Material	Steel
Surface	Electrogalvanised
Surface standard	EN ISO 19598 / EN ISO 4042
Smallest sales unit	100
Unit of quantity	Piece
Weight	0.063 kg
Weight unit	kg/100 pc.
CO2 Footprint (GWP) Cradle-to-Gate	0,0017 kg CO2e / 1 Piece

Dimensions

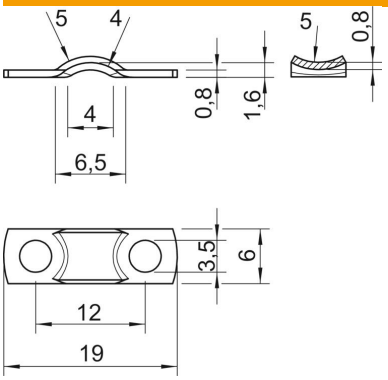

Length	19 mm
Width	6 mm
Height	1.6 mm
Dimension a1 (mm)	6.5 mm
Dimension a2	4 mm
Dimension b	6 mm
Dimension d	3.5 mm
Dimension h	1.6 mm
Dimension H1 (mm)	0.8
Dimension L	19 mm
Dimension l	12 mm
Dimension R	5 mm
Dimension (mm)	4 mm
Dimension r1 (mm)	5
Dimension t	0.8 mm

Technical data sheet

Strain relief clip 7901

Item number: 1435019

Technical data

Distance to the wall	no
Number of cables/pipes	1
Version for	Two-lobe
Fastening type	Screw hole
For diameter	5
Suitable in fire protection area	no
Size	I
Halogen-free	yes
Plastic-covered	no
Hole size	3,5
Material thickness	0.8 mm
Nominal diameter	5 mm
ROHS-conformant	yes
Clamping range D, max.	5 mm
Clamping range D, min.	5 mm
UV-resistant	yes