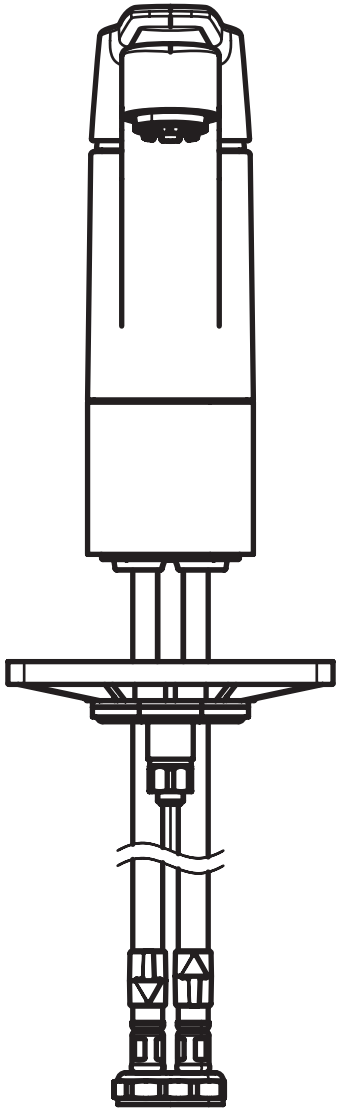

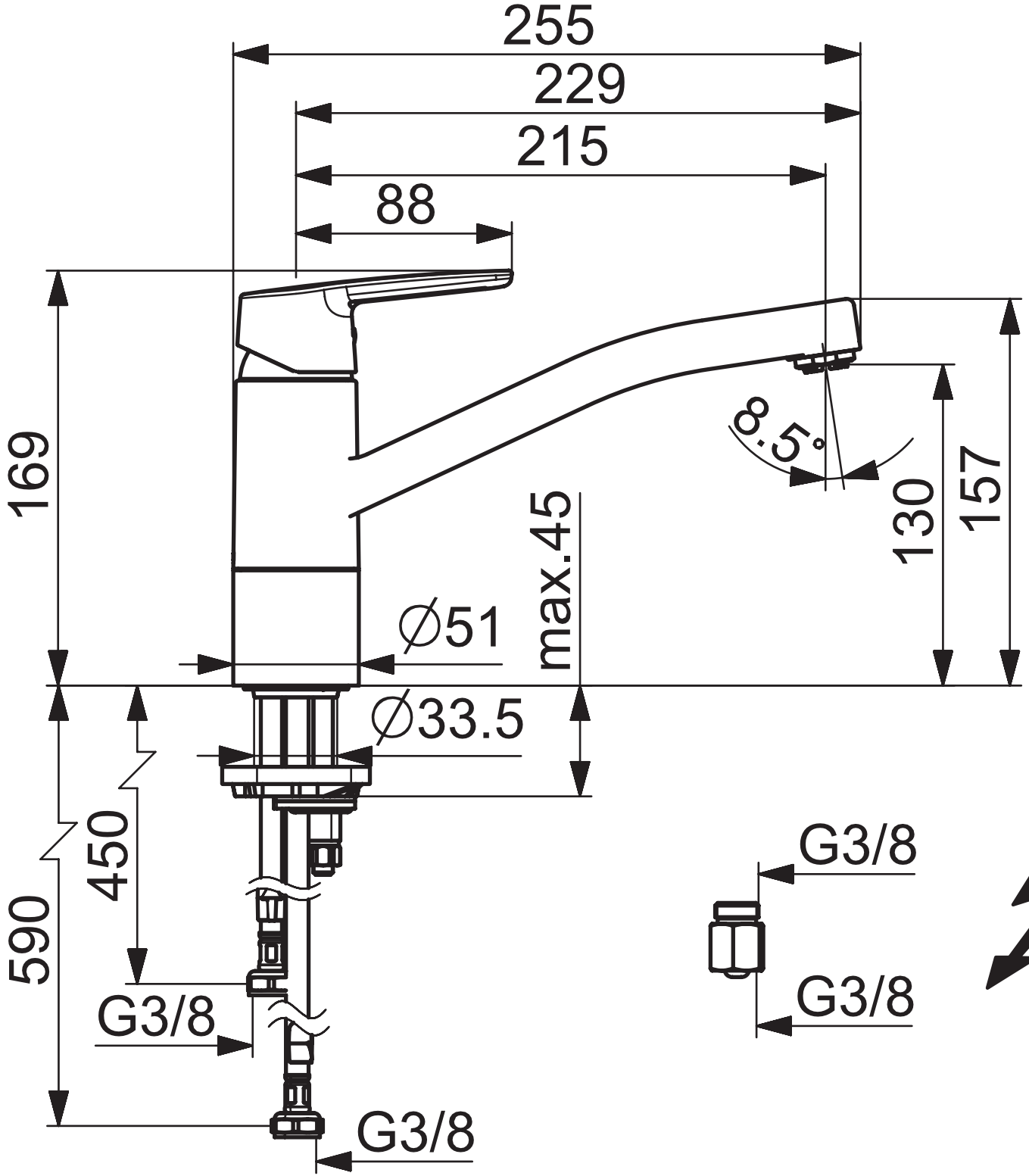
255
229
215
88
169
8.5°
130
157
max.45
∅51
∅33.5
450
590
G3/8
G3/8

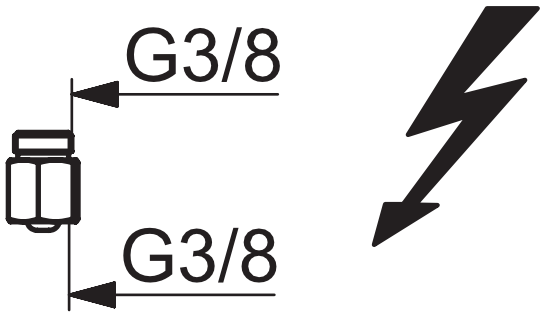
G3/8
G3/8